Instruction Sheet
7169013_04

HDLV® Standalone Pump Panel - Encore®

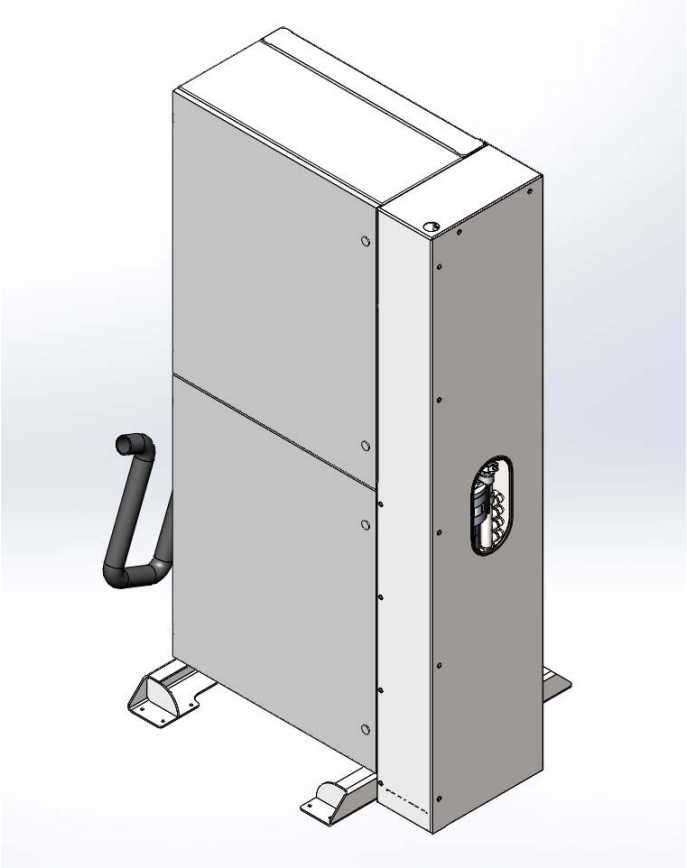

Fig. 1 HDLV Standalone Pump Panel (Two Eight-Pump Panels are shown)

The pump panel is the central electrical and pneumatic enclosure for HDLV® pumps used with Encore® HD Automatic Spray Guns. The pump panels are available in various configurations: four, six and eight pumps, enabling each stand to hold up to sixteen pumps. Each panel houses the HDLV pumps, pump manifolds + pump control boards, air filter + pneumatic controls and the DC power supply.

This standalone system comprises of the HDLV Pump Panel with air reservoir to purge clean the pumps, powder tubing and guns.

© 2018 Nordson Corporation

Installation

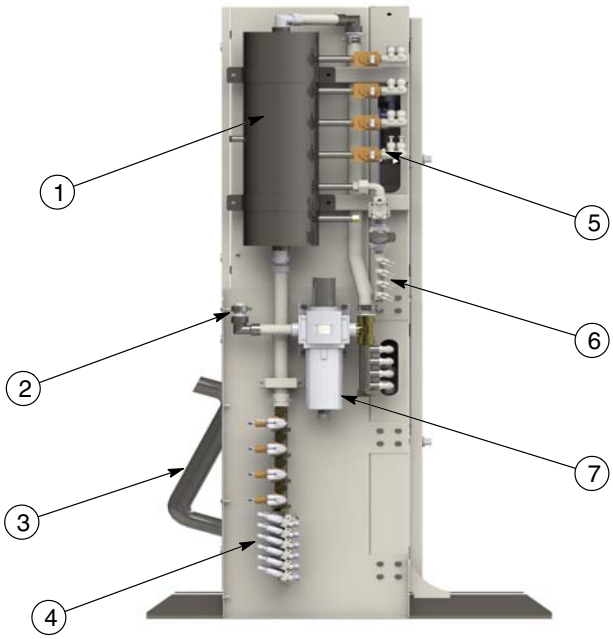

Fig. 2 Pneumatics major component overview

1. Purge Tank
2. Air input
3. Powder hose conduit
4. Diffuser cleaning air
5. Pump purge valves
6. Electrode air wash supply
7. Filtration and regulation unit

1. Position the unit in the desired location and secure to the floor.
2. Connect 1” pneumatic air supply to the inlet of the filter unit (see figure 2). Supply pressure must be 6.5bar (dynamic)

NOTE: Pump panels are connected according to the instructions in the Installation chapter of the technical manual, found at http://emanuals.nordson.com/finishing/files/Powder/1102110

Purge Clean Cycle

To activate the purge clean cycle, press the corresponding button on your Powder Pilot ™ HD or iControl® 2 console.

NOTE: This should only be activated when the booth is empty of products and operators.

© 2018 Nordson Corporation

Troubleshooting

These troubleshooting procedures cover only the most common problems. If you cannot solve a problem with the information given here, contact your local Nordson representative for help.

Problem	Possible Cause	Corrective Action
1. Guns not clean after purge	Low or no air pressure at pulse tank inlet	Check for air leaks and ensure 6.5bar dynamic pressure.
2. Guns/pumps not purging	Not activated at iControl or master control	Ensure iControl/master control is switched on and activated.
	No air pressure at purge tank.	Check compressor is functioning correctly and 6.5bar dynamic pressure is available.
	Mains/control voltage is off.	Check for air leaks and fix.
	No air pressure at purge tank.	Check that mains electricity is switched on.
	Mains/control voltage is off.	Check control voltage is at the pump panel.

NOTE: For further information regarding issues with the pump panel, including maintenance and repair, please refer to manual found at http://emanuals.nordson.com/finishing/files/Powder/1102110

Parts

To order parts, call the Nordson Finishing Customer Support Centre at +800 7001 7001 or contact your local Nordson representative.

The number in the Part column is the Nordson GmbH part number.

The Description column gives the part name, as well as its variation.

Letters in the Note column refer to notes at the end of each parts list. Notes can contain important information about usage and ordering. Special attention should be given to notes.

Part	Description	Note
7033180	STAND ALONE HDLV PUMP PANEL,4 PUMP,GEN3	A
7033181	STAND ALONE HDLV PUMP PANEL,6 PUMP,GEN3	A
7033182	STAND ALONE HDLV PUMP PANEL,8 PUMP,GEN3	A
7033183	STAND ALONE HDLV PUMP PANEL,10 PUMP,GEN3	A
7033184	STAND ALONE HDLV PUMP PANEL,12 PUMP,GEN3	A
7033185	STAND ALONE HDLV PUMP PANEL,14 PUMP,GEN3	A
7033186	STAND ALONE HDLV PUMP PANEL,16 PUMP,GEN3	A
NOTE A: For operation and spare parts of the pump panels please refer to the Nordson emanuals website http://emanuals.nordson.com/finishing/files/Powder/1102110		

© 2018 Nordson Corporation

Dimensions

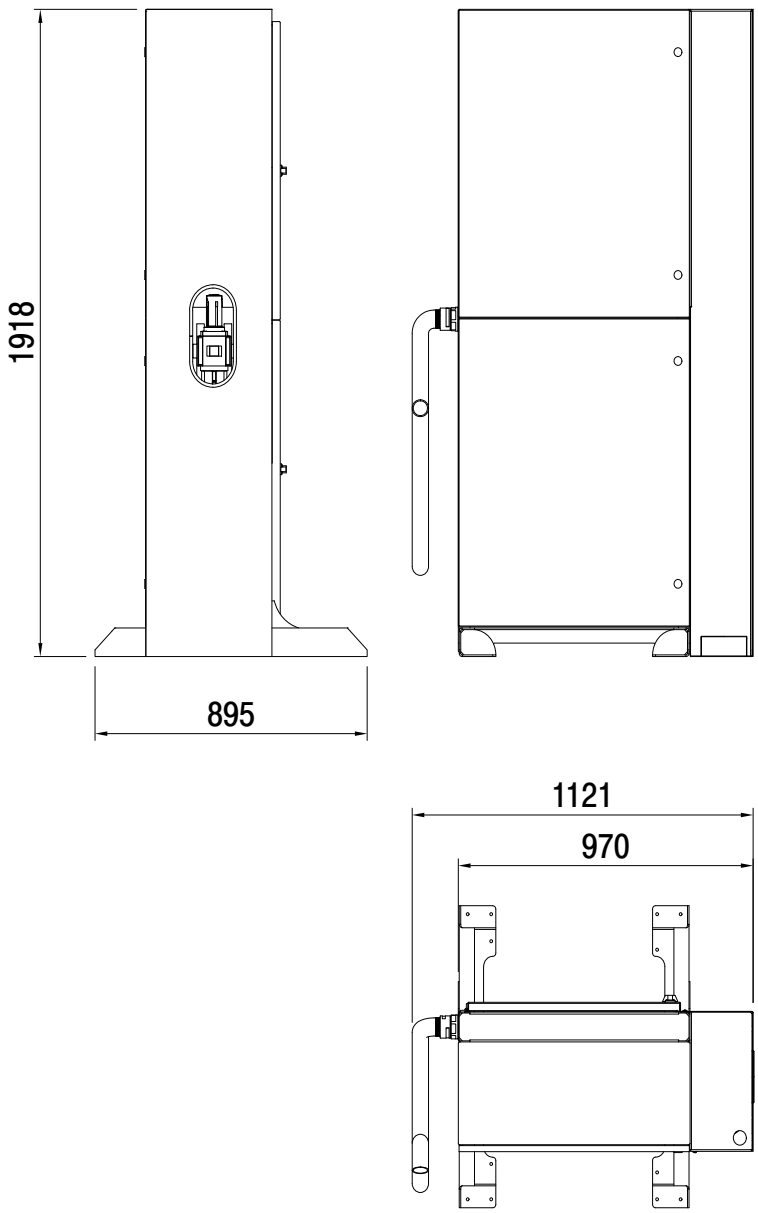

Fig. 3 Overall dimensions

Notice

This is a Nordson Corporation publication which is protected by copyright. Original copyright date 2010. No part of this document may be photocopied, reproduced, or translated to another language without the prior written consent of Nordson Corporation. The information contained in this publication is subject to change without notice.

Issued 02/18

Trademarks

Encore, HDLV, Spectrum, Nordson, and the Nordson logo are registered trademarks of Nordson Corporation. All other trademarks are the property of their respective owners.

http://www.nordson.com/en/global-directory

© 2018 Nordson Corporation

Cover sheet

HDLV Pneumatic

			Date	18.01.2018	This drawing is exclusive property of Nordson Deutschland Technical Office. It must not in any case be used to the prejudice of his interest.	Nordson Deutschland GmbH Heinrich-Hertz-Str. 42 40699 Erkrath Tel.: (+49) 211- 9205-0 Fax.: (+49) 211- 254658 www.nordson.com	Description Cover sheet	=	
			Editor	Zimmermann				+ A0	HDLV Pneumatic
			Revision	18.01.2018					Page 1
								02-258-554	of 2 Pages

Table of contents

Page	Page description	Supplementary page field	Date	Edited by	X
+A0/1	Cover sheet	1	18.01.2018	Zimmermann	X
+A0/2	Table of contents	2	07.02.2018	Zimmermann	
+PN/1	PNEUMATIK CONNECTIONS	3	06.02.2018	Zimmermann	
+PN/2	PNEUMATIK CONNECTIONS	4	07.02.2018	Zimmermann	
+PN/3	PNEUMATIK CONNECTIONS	5	07.02.2018	Zimmermann	
+PN/4	PNEUMATIK CONNECTIONS	6	07.02.2018	Zimmermann	
+PN/5	PNEUMATIK CONNECTIONS	7	07.02.2018	Zimmermann	
+PN/6	PNEUMATIK CONNECTIONS	8	07.02.2018	Zimmermann	
+PN/7	PNEUMATIK CONNECTIONS	9	07.02.2018	Zimmermann	
+PN/8	PNEUMATIK CONNECTIONS	10	07.02.2018	Zimmermann	
+PL/1	Parts list	11	07.02.2018	Zimmermann	
+PL/2	Parts list	12	07.02.2018	Zimmermann	
+PL/3	Parts list	13	07.02.2018	Zimmermann	

Date	07.02.2018	Description	Table of contents
Editor	Zimmermann	=	
Revision	07.02.2018	+ A0	HDLV Pneumatic
		02-258-554	Page 2 of 2 Pages

This drawing is exclusive property of Nordson Deutschland Technical Office. It must not in any case be used to the prejudice of his interest.

Nordson Deutschland GmbH
Heinrich-Hertz-Str. 42
40699 Erkrath
Tel.: (+49) 211- 9205-0
Fax.: (+49) 211- 254658
www.nordson.com

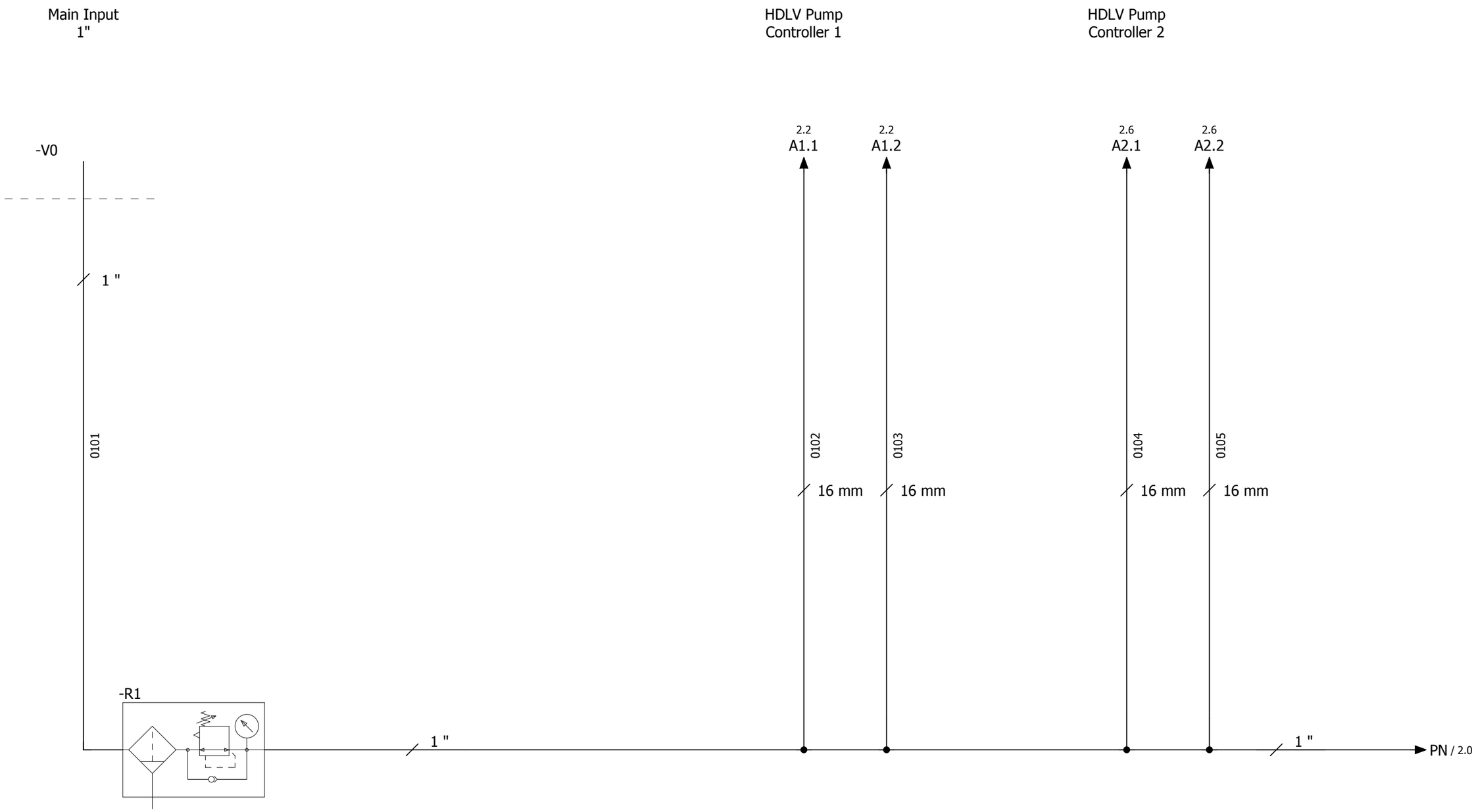

Date	18.01.2018	This drawing is exclusive property of Nordson Deutschland Technical Office. It must not in any case be used to the prejudice of his interest.	Nordson Deutschland GmbH Heinrich-Hertz-Str. 42 40699 Erkrath Tel.: (+49) 211- 9205-0 Fax.: (+49) 211- 254658 www.nordson.com	Description PNEUMATIK CONNECTIONS
Editor	Zimmermann			
Revision	06.02.2018			

=			
+ PN	HDLV Pneumatic		
		Page	1
	02-258-554	of	8 Pages

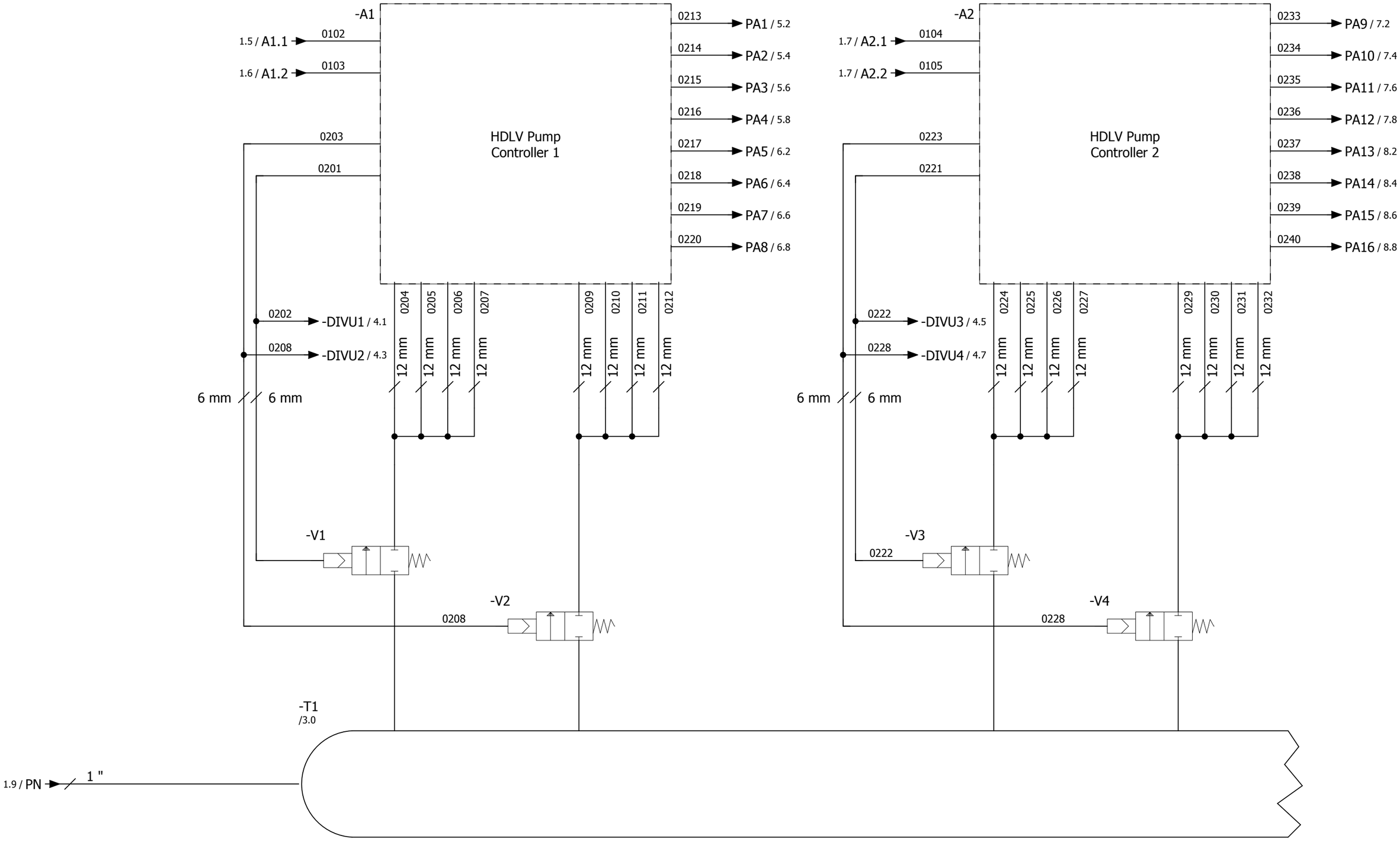

1 3

			Date	18.01.2018	This drawing is exclusive property of Nordson Deutschland Technical Office. It must not in any case be used to the prejudice of his interest.	Nordson Deutschland GmbH Heinrich-Hertz-Str. 42 40699 Erkrath Tel.: (+49) 211- 9205-0 Fax.: (+49) 211- 254658 www.nordson.com	Description PNEUMATIK CONNECTIONS	=	
			Editor	Zimmermann				+ PN	HDLV Pneumatic
			Revision	07.02.2018					Page 2
								02-258-554	of 8 Pages

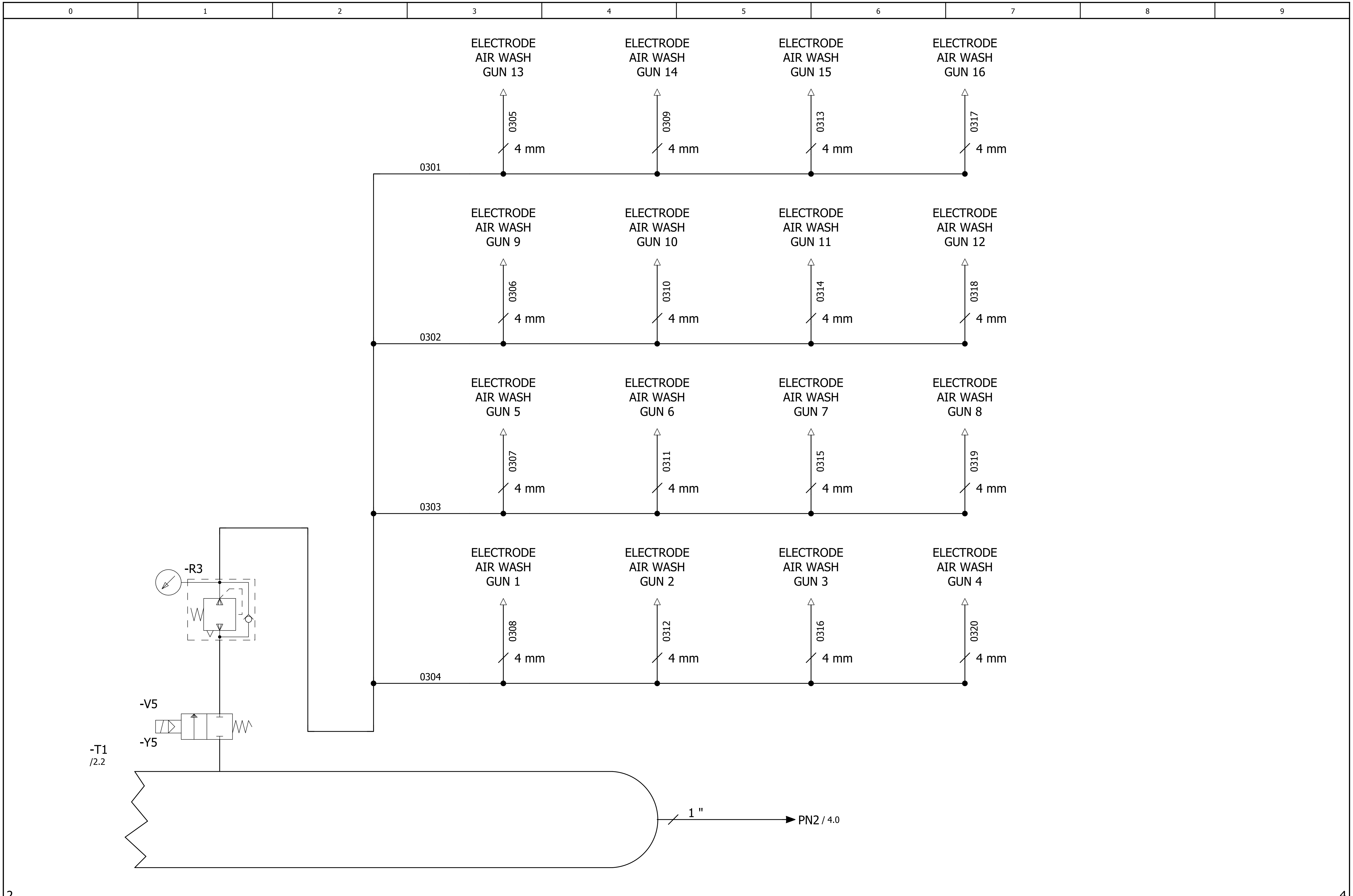

		Date	18.01.2018	This drawing is exclusive property of Nordson Deutschland Technical Office. It must not in any case be used to the prejudice of his interest.	Nordson	Nordson Deutschland GmbH Heinrich-Hertz-Str. 42 40699 Erkrath Tel.: (+49) 211- 9205-0 Fax.: (+49) 211- 254658 www.nordson.com	Description PNEUMATIK CONNECTIONS	=	
		Editor	Zimmermann					+ PN	HDLV Pneumatic
		Revision	07.02.2018						Page 3
								02-258-554	of 8 Pages

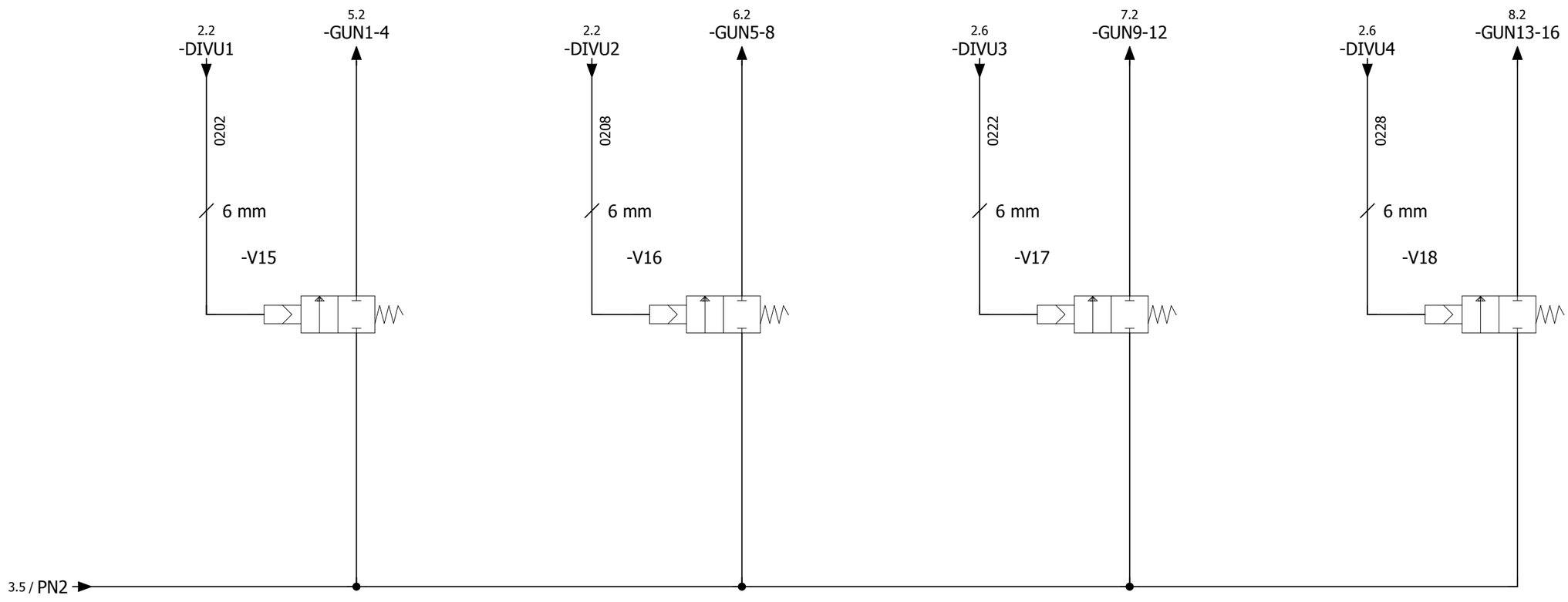

			Date	18.01.2018	This drawing is exclusive property of Nordson Deutschland Technical Office. It must not in any case be used to the prejudice of his interest.	Nordson Deutschland GmbH Heinrich-Hertz-Str. 42 40699 Erkrath Tel.: (+49) 211- 9205-0 Fax.: (+49) 211- 254658 www.nordson.com	Description PNEUMATIK CONNECTIONS	=	
			Editor	Zimmermann				+ PN	HDLV Pneumatic
			Revision	07.02.2018					Page 4
								02-258-554	of 8 Pages

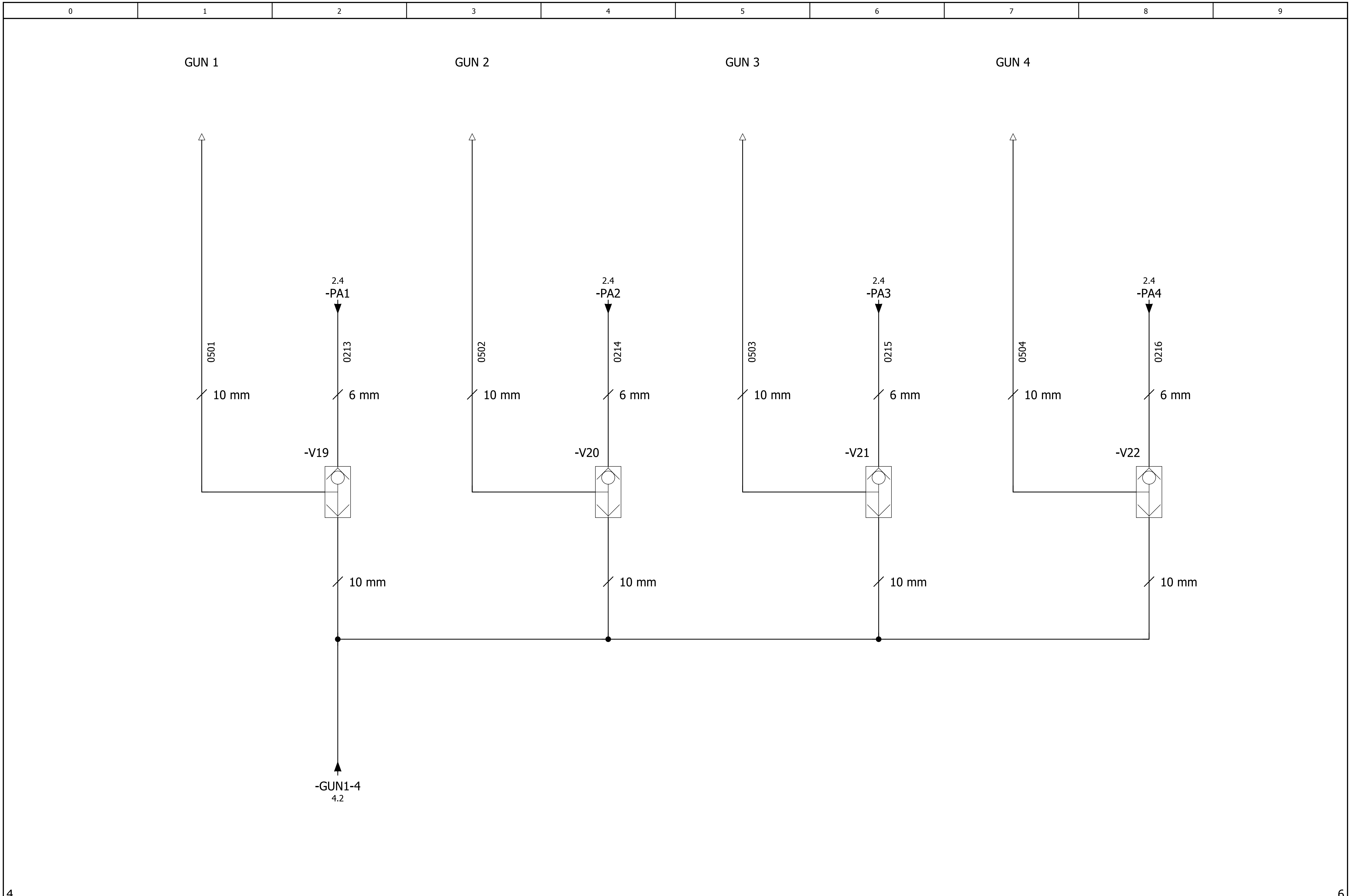

Date	18.01.2018
Editor	Zimmermann
Revision	07.02.2018

This drawing is exclusive property of Nordson Deutschland Technical Office. It must not in any case be used to the prejudice of his interest.

Nordson
Nordson Deutschland GmbH
Heinrich-Hertz-Str. 42
40699 Erkrath
Tel.: (+49) 211- 9205-0
Fax.: (+49) 211- 254658
www.nordson.com

Description
PNEUMATIK CONNECTIONS

=
+ PN HDLV Pneumatic
02-258-554

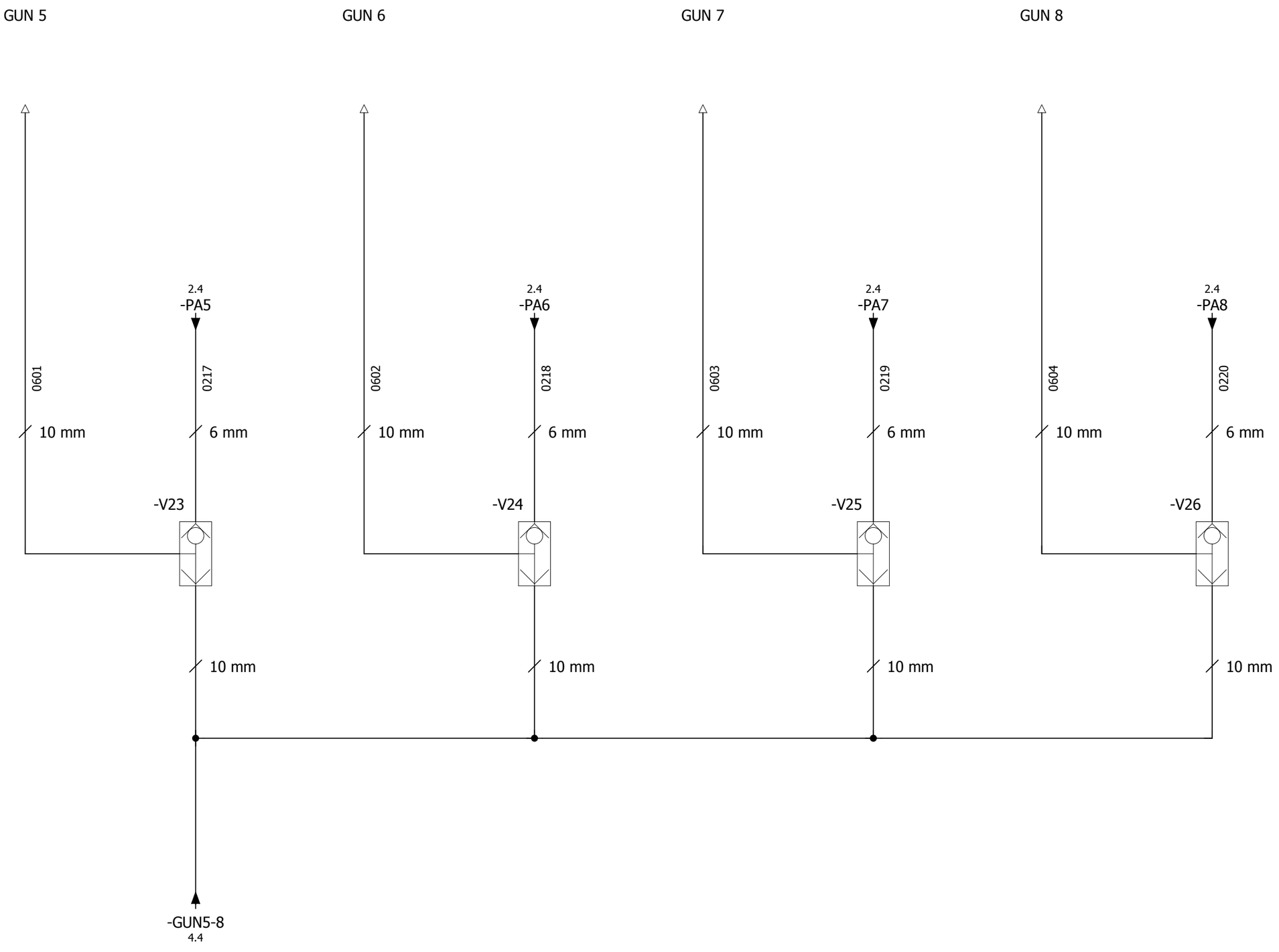

5 7

Date	18.01.2018	This drawing is exclusive property of Nordson Deutschland Technical Office. It must not in any case be used to the prejudice of his interest.	Nordson Deutschland GmbH Heinrich-Hertz-Str. 42 40699 Erkrath Tel.: (+49) 211- 9205-0 Fax.: (+49) 211- 254658 www.nordson.com	Description PNEUMATIK CONNECTIONS
Editor	Zimmermann			
Revision	07.02.2018			

=	
+ PN	HDLV Pneumatic
02-258-554	Page 6 of 8 Pages

0	1	2	3	4	5	6	7	8	9

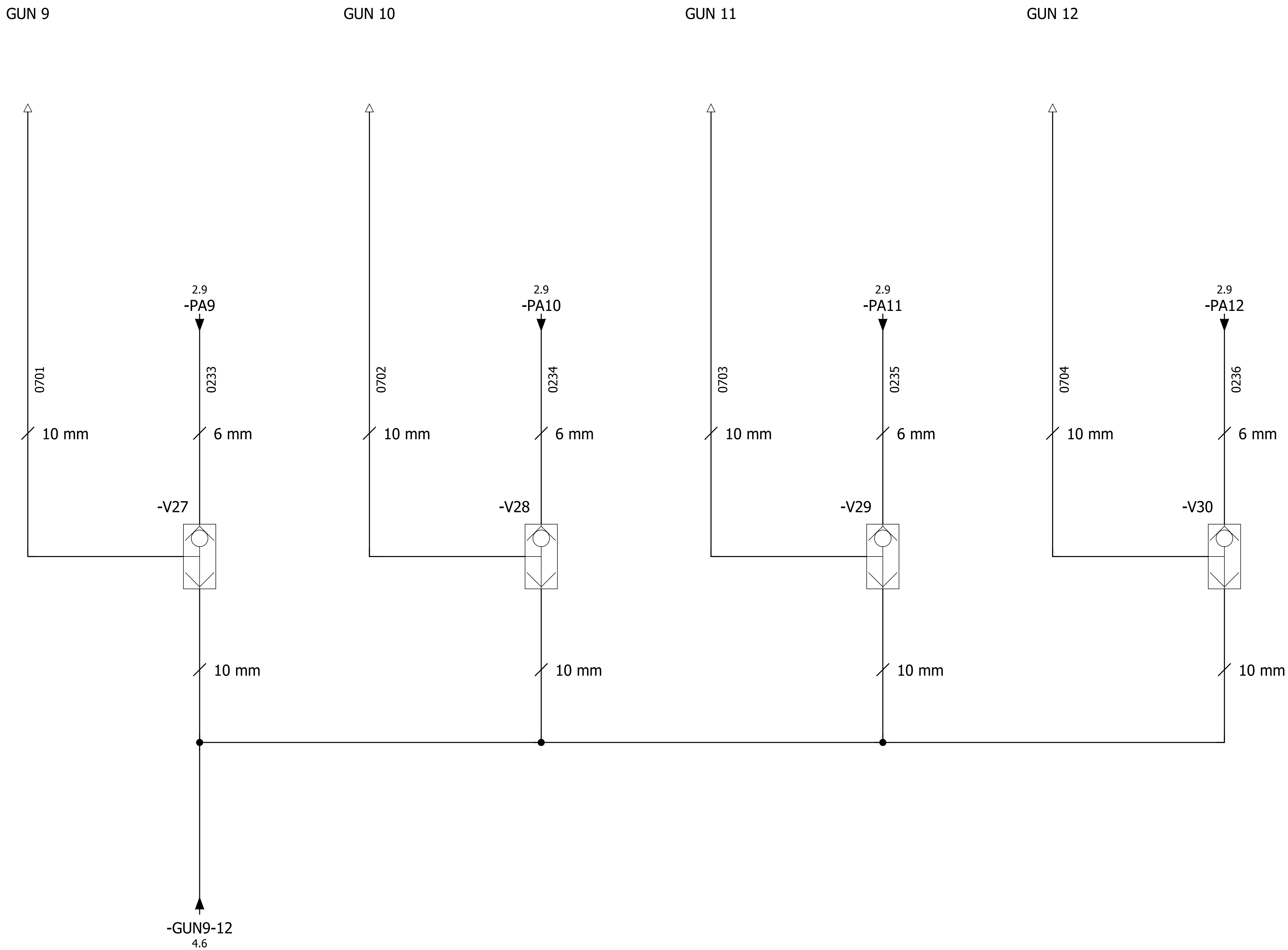

6

8

Date	18.01.2018	This drawing is exclusive property of Nordson Deutschland Technical Office. It must not in any case be used to the prejudice of his interest.	Nordson Deutschland GmbH Heinrich-Hertz-Str. 42 40699 Erkrath Tel.: (+49) 211- 9205-0 Fax.: (+49) 211- 254658 www.nordson.com	Description PNEUMATIK CONNECTIONS	=	
Editor	Zimmermann				+ PN	HDLV Pneumatic
Revision	07.02.2018				02-258-554	Page 7 of 8 Pages

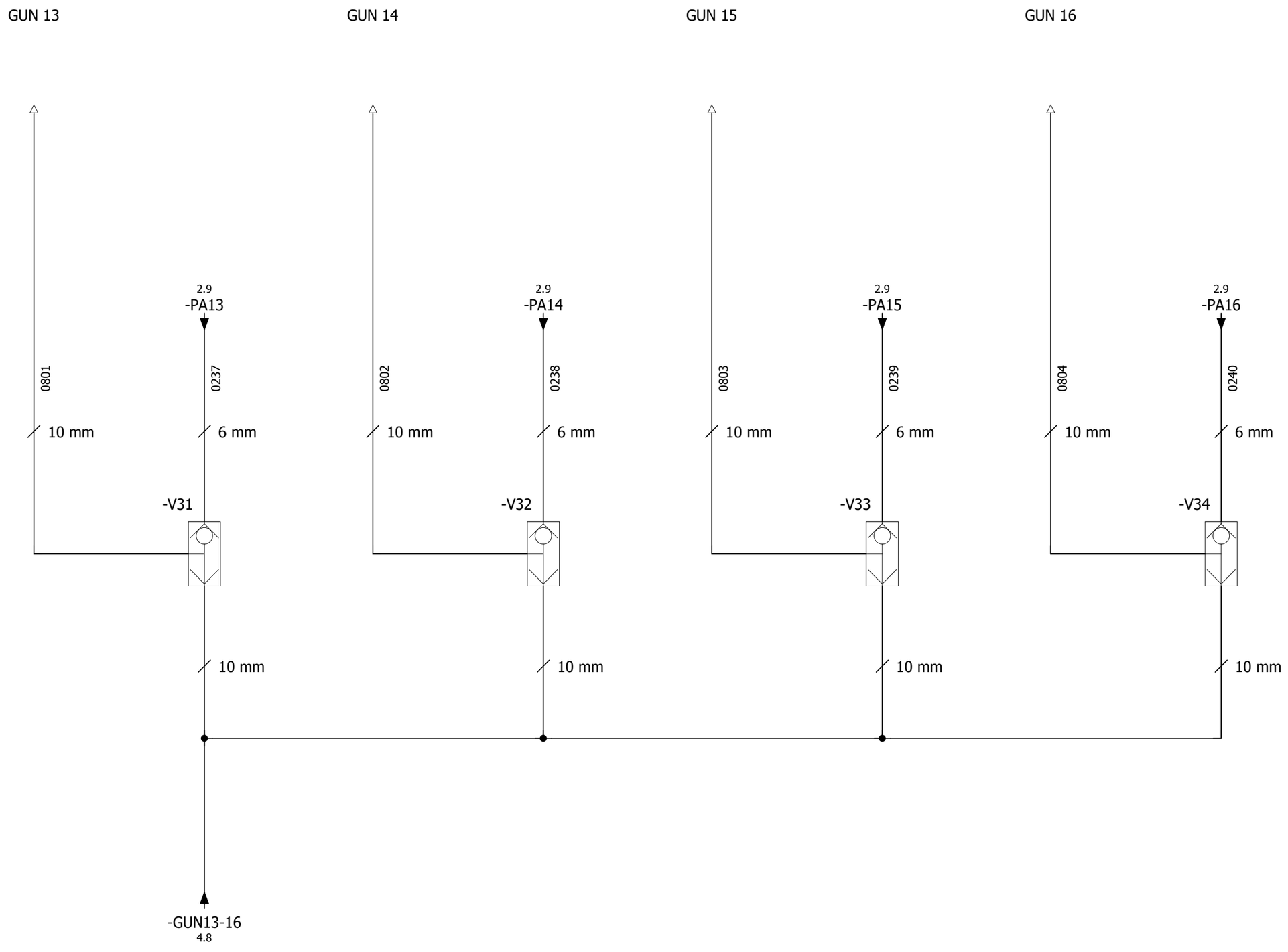

+PL/1

Date	18.01.2018	This drawing is exclusive property of Nordson Deutschland Technical Office. It must not in any case be used to the prejudice of his interest.	
Editor	Zimmermann		
Revision	07.02.2018		

Nordson Deutschland GmbH
Heinrich-Hertz-Str. 42
40699 Erkrath
Tel.: (+49) 211- 9205-0
Fax.: (+49) 211- 254658
www.nordson.com

Description
PNEUMATIK CONNECTIONS

=			
+ PN	HDLV Pneumatic		
		Page	8
	02-258-554	of	8 Pages

Parts list

Device tag	Quantity	Designation	Type number	Part number	Supplier
+PN-A1	8	Y Quick conector 12mm - 2x10mm	KQ2U10-12A	SMC.KQ2U10-12A	SMC Pneumatik GmbH
+PN-A2	8	Y Quick conector 12mm - 2x10mm	KQ2U10-12A	SMC.KQ2U10-12A	SMC Pneumatik GmbH
+PN-R1	1	Filter regulator unit MS9-LFR	MS9-LFR-AGF-D6-C-U-M-AG-BAR-AS-WPM	FESTO.MS9-LFR-AGF-D6-C-U-M-AG-BAR-AS-WPM	Festo AG & Co. KG
+PN-R1	2	Hose Tail 1"-25mm	GT 1025 MSV	JAEGER.GT 1025 MSV	Jaeger Pneumatic
+PN-R1	1	Tube 1" 100mm	RONI 10/100 ST	JAEGER.RONI 10/100 ST	Jaeger Pneumatic
+PN-R1	2	Tube Clamp	SSB 37 ES	JAEGER.SSB 37 ES	Jaeger Pneumatic
+PN-R1	1	T-Piece 1"	TE 10 MSV	JAEGER.TE 10 MSV	Jaeger Pneumatic
+PN-R1	1	Blind Cap 1"	VS 10 A MSV	JAEGER.VS 10 A MSV	Jaeger Pneumatic
+PN-R1	1	Manifold 1" - 4x 1/2"	VTI 104 MSV	JAEGER.VTI 104 MSV	Jaeger Pneumatic
+PN-R1	1	Elbow 1" 90°	W 10 MSV	JAEGER.W 10 MSV	Jaeger Pneumatic
+PN-R1	4	Push In Fitting Elbow 90° 1/2" to 16mm	KQ2L16-04AS	SMC.KQ2L16-04AS	SMC Pneumatik GmbH
+PN-R1	2	Blind Plug 16mm	KQ2P-16	SMC.KQ2P-16	SMC Pneumatik GmbH
+PN-R3	4	Multiple distributor	QSLV4-1/8-4	FESTO.QSLV4-1/8-4	Festo AG & Co. KG
+PN-R3	14	Blanking plug	QSC-4H	FESTO.QSC-4H	Festo AG & Co. KG
+PN-R3	1	Pressure regulator MS4-LR	MS4-LR-AGC-D5-Z	FESTO.MS4-LR-AGC-D5-Z	Festo AG & Co. KG
+PN-R3	1	Double nipple G 1/2"-G 3/8"	DN 1238 MSV	JAEGER.DN 1238 MSV	Jaeger Pneumatic
+PN-R3	1	Distributor bar 2 x G 3/8"-4 x G 1/8"	RLE 43818 A	JAEGER.RLE 43818 A	Jaeger Pneumatic
+PN-R3	1	Blind Cap G 3/8"	VS 38 AMSV	JAEGER.VS 38 AMSV	Jaeger Pneumatic
+PN-T1	1	Double nipple G 1/2"-G 3/8"	DN 1238 MSV	JAEGER.DN 1238 MSV	Jaeger Pneumatic
+PN-T1	1	Pipe clamp	GR 5337 LARPV	JAEGER.GR 5337 LARPV	Jaeger Pneumatic
+PN-T1	1	Hose Tail 1"-25mm	GT 1025 MSV	JAEGER.GT 1025 MSV	Jaeger Pneumatic
+PN-T1	2	Sleeve G 1"-G 1"	MU 10 MSV	JAEGER.MU 10 MSV	Jaeger Pneumatic
+PN-T1	1	Tube 1" 120mm	RONI 10/120 ST	JAEGER.RONI 10/120 ST	Jaeger Pneumatic
+PN-T1	2	Tube 1" 200mm	RONI 10/200 ST	JAEGER.RONI 10/200 ST	Jaeger Pneumatic
+PN-T1	1	Tube Clamp	SSB 37 ES	JAEGER.SSB 37 ES	Jaeger Pneumatic
+PN-T1	5	Blind Cap 1/2"	VK 12 MSV	JAEGER.VK 12 MSV	Jaeger Pneumatic
+PN-T1	1	Blind Cap 1"	VS 10 A MSV	JAEGER.VS 10 A MSV	Jaeger Pneumatic
+PN-T1	1	Blind Cap 1/4"	VS 14 A MSV	JAEGER.VS 14 A MSV	Jaeger Pneumatic
+PN-T1	4	Distributor pipe G 1", 2 outlets G 1/2"	VTA 102 MSV	JAEGER.VTA 102 MSV	Jaeger Pneumatic
+PN-T1	1	Elbow 1" 90°	W 10 MSV	JAEGER.W 10 MSV	Jaeger Pneumatic
+PN-T1	3	Elbow 1" 90°	WE 10 MSV	JAEGER.WE 10 MSV	Jaeger Pneumatic
+PN-T1	1	Elbow 1/2" 90°	WT 12 FES	JAEGER.WT 12 FES	Jaeger Pneumatic
+PN-T1	1	Airtank 6x 1/2"	DP14265R0X0P000A	TURBO.DP14265R0X0P000A	
+PN-V1	1	Multiple distributor	QSLV4-1/2-12	FESTO.QSLV4-1/2-12	Festo AG & Co. KG
+PN-V1	1	Plug in fitting	QSMT-M5-6	FESTO.QSMT-M5-6	Festo AG & Co. KG
+PN-V1	1	Solenoid valve	VLX-2-1/2-MS	FESTO.VLX-2-1/2-MS	Festo AG & Co. KG
+PN-V2	1	Multiple distributor	QSLV4-1/2-12	FESTO.QSLV4-1/2-12	Festo AG & Co. KG
+PN-V2	1	Plug in fitting	QSMT-M5-6	FESTO.QSMT-M5-6	Festo AG & Co. KG

This drawing is exclusive property of Nordson Deutschland Technical Office. It must not in any case be used to the prejudice of his interest.

Nordson
Nordson Deutschland GmbH
Heinrich-Hertz-Str. 42
40699 Erkrath
Tel.: (+49) 211- 9205-0
Fax.: (+49) 211- 254658
www.nordson.com

Description
Parts list

Parts list

Device tag	Quantity	Designation	Type number	Part number	Supplier
+PN-V2	1	Solenoid valve	VLX-2-1/2-MS	FESTO.VLX-2-1/2-MS	Festo AG & Co. KG
+PN-V3	1	Multiple distributor	QSLV4-1/2-12	FESTO.QSLV4-1/2-12	Festo AG & Co. KG
+PN-V3	1	Plug in fitting	QSMT-M5-6	FESTO.QSMT-M5-6	Festo AG & Co. KG
+PN-V3	1	Solenoid valve	VLX-2-1/2-MS	FESTO.VLX-2-1/2-MS	Festo AG & Co. KG
+PN-V4	1	Multiple distributor	QSLV4-1/2-12	FESTO.QSLV4-1/2-12	Festo AG & Co. KG
+PN-V4	1	Plug in fitting	QSMT-M5-6	FESTO.QSMT-M5-6	Festo AG & Co. KG
+PN-V4	1	Solenoid valve	VLX-2-1/2-MS	FESTO.VLX-2-1/2-MS	Festo AG & Co. KG
+PN-V4	2	Blanking plug	QSC-12H	FESTO.QSC-12H	Festo AG & Co. KG
+PN-V5	1	Solenoid	MD-2-24VDC-PA	FESTO.MD-2-24VDC-PA	Festo AG & Co. KG
+PN-V5	1	Connecting plug for solenoid and valve	MSSD-N	FESTO.MSSD-N	Festo AG & Co. KG
+PN-V5	1	Double nipple G 1/2"-G 3/8"	DN 1238 MSV	JAEGER.DN 1238 MSV	Jaeger Pneumatic
+PN-V15	1	Multiple distributor	QSLV4-3/8-10	FESTO.QSLV4-3/8-10	Festo AG & Co. KG
+PN-V15	1	Push-in/threaded L-fitting	QSML-M5-6	FESTO.QSML-M5-6	
+PN-V15	1	Solenoid valve	VLX-2-1/2-MS	FESTO.VLX-2-1/2-MS	Festo AG & Co. KG
+PN-V15	1	Reducing nipple G 1/2"-G 3/8"	RN 1238 MSV	JAEGER.RN 1238 MSV	Jaeger Pneumatic
+PN-V16	1	Multiple distributor	QSLV4-3/8-10	FESTO.QSLV4-3/8-10	Festo AG & Co. KG
+PN-V16	1	Push-in/threaded L-fitting	QSML-M5-6	FESTO.QSML-M5-6	
+PN-V16	1	Solenoid valve	VLX-2-1/2-MS	FESTO.VLX-2-1/2-MS	Festo AG & Co. KG
+PN-V16	1	Reducing nipple G 1/2"-G 3/8"	RN 1238 MSV	JAEGER.RN 1238 MSV	Jaeger Pneumatic
+PN-V17	1	Multiple distributor	QSLV4-3/8-10	FESTO.QSLV4-3/8-10	Festo AG & Co. KG
+PN-V17	1	Push-in/threaded L-fitting	QSML-M5-6	FESTO.QSML-M5-6	
+PN-V17	1	Solenoid valve	VLX-2-1/2-MS	FESTO.VLX-2-1/2-MS	Festo AG & Co. KG
+PN-V17	1	Reducing nipple G 1/2"-G 3/8"	RN 1238 MSV	JAEGER.RN 1238 MSV	Jaeger Pneumatic
+PN-V18	1	Multiple distributor	QSLV4-3/8-10	FESTO.QSLV4-3/8-10	Festo AG & Co. KG
+PN-V18	1	Push-in/threaded L-fitting	QSML-M5-6	FESTO.QSML-M5-6	
+PN-V18	1	Solenoid valve	VLX-2-1/2-MS	FESTO.VLX-2-1/2-MS	Festo AG & Co. KG
+PN-V18	1	Reducing nipple G 1/2"-G 3/8"	RN 1238 MSV	JAEGER.RN 1238 MSV	Jaeger Pneumatic
+PN-V18	2	Blanking plug	QSC-10H	FESTO.QSC-10H	Festo AG & Co. KG
+PN-V19	1	Push-in fitting	QS-10H-6	FESTO.QS-10H-6	Festo AG & Co. KG
+PN-V19	1	Holder	TMH-10	SMC.TMH-10	SMC Pneumatik GmbH
+PN-V19	1	Shuttle Valve, 10mm	VR1220F-10	SMC.VR1220F-10	SMC Pneumatik GmbH
+PN-V20	1	Push-in fitting	QS-10H-6	FESTO.QS-10H-6	Festo AG & Co. KG
+PN-V20	1	Holder	TMH-10	SMC.TMH-10	SMC Pneumatik GmbH
+PN-V20	1	Shuttle Valve, 10mm	VR1220F-10	SMC.VR1220F-10	SMC Pneumatik GmbH
+PN-V21	1	Push-in fitting	QS-10H-6	FESTO.QS-10H-6	Festo AG & Co. KG
+PN-V21	1	Holder	TMH-10	SMC.TMH-10	SMC Pneumatik GmbH
+PN-V21	1	Shuttle Valve, 10mm	VR1220F-10	SMC.VR1220F-10	SMC Pneumatik GmbH
+PN-V22	1	Push-in fitting	QS-10H-6	FESTO.QS-10H-6	Festo AG & Co. KG

This drawing is exclusive property of Nordson Deutschland Technical Office. It must not in any case be used to the prejudice of his interest.

Nordson Deutschland GmbH
Heinrich-Hertz-Str. 42
40699 Erkrath
Tel.: (+49) 211- 9205-0
Fax.: (+49) 211- 254658
www.nordson.com

Parts list

Device tag	Quantity	Designation	Type number	Part number	Supplier
+PN-V22	1	Holder	TMH-10	SMC.TMH-10	SMC Pneumatik GmbH
+PN-V22	1	Shuttle Valve, 10mm	VR1220F-10	SMC.VR1220F-10	SMC Pneumatik GmbH
+PN-V23	1	Push-in fitting	QS-10H-6	FESTO.QS-10H-6	Festo AG & Co. KG
+PN-V23	1	Holder	TMH-10	SMC.TMH-10	SMC Pneumatik GmbH
+PN-V23	1	Shuttle Valve, 10mm	VR1220F-10	SMC.VR1220F-10	SMC Pneumatik GmbH
+PN-V24	1	Push-in fitting	QS-10H-6	FESTO.QS-10H-6	Festo AG & Co. KG
+PN-V24	1	Holder	TMH-10	SMC.TMH-10	SMC Pneumatik GmbH
+PN-V24	1	Shuttle Valve, 10mm	VR1220F-10	SMC.VR1220F-10	SMC Pneumatik GmbH
+PN-V25	1	Push-in fitting	QS-10H-6	FESTO.QS-10H-6	Festo AG & Co. KG
+PN-V25	1	Holder	TMH-10	SMC.TMH-10	SMC Pneumatik GmbH
+PN-V25	1	Shuttle Valve, 10mm	VR1220F-10	SMC.VR1220F-10	SMC Pneumatik GmbH
+PN-V26	1	Push-in fitting	QS-10H-6	FESTO.QS-10H-6	Festo AG & Co. KG
+PN-V26	1	Holder	TMH-10	SMC.TMH-10	SMC Pneumatik GmbH
+PN-V26	1	Shuttle Valve, 10mm	VR1220F-10	SMC.VR1220F-10	SMC Pneumatik GmbH
+PN-V27	1	Push-in fitting	QS-10H-6	FESTO.QS-10H-6	Festo AG & Co. KG
+PN-V27	1	Holder	TMH-10	SMC.TMH-10	SMC Pneumatik GmbH
+PN-V27	1	Shuttle Valve, 10mm	VR1220F-10	SMC.VR1220F-10	SMC Pneumatik GmbH
+PN-V28	1	Push-in fitting	QS-10H-6	FESTO.QS-10H-6	Festo AG & Co. KG
+PN-V28	1	Holder	TMH-10	SMC.TMH-10	SMC Pneumatik GmbH
+PN-V28	1	Shuttle Valve, 10mm	VR1220F-10	SMC.VR1220F-10	SMC Pneumatik GmbH
+PN-V29	1	Push-in fitting	QS-10H-6	FESTO.QS-10H-6	Festo AG & Co. KG
+PN-V29	1	Holder	TMH-10	SMC.TMH-10	SMC Pneumatik GmbH
+PN-V29	1	Shuttle Valve, 10mm	VR1220F-10	SMC.VR1220F-10	SMC Pneumatik GmbH
+PN-V30	1	Push-in fitting	QS-10H-6	FESTO.QS-10H-6	Festo AG & Co. KG
+PN-V30	1	Holder	TMH-10	SMC.TMH-10	SMC Pneumatik GmbH
+PN-V30	1	Shuttle Valve, 10mm	VR1220F-10	SMC.VR1220F-10	SMC Pneumatik GmbH
+PN-V31	1	Push-in fitting	QS-10H-6	FESTO.QS-10H-6	Festo AG & Co. KG
+PN-V31	1	Holder	TMH-10	SMC.TMH-10	SMC Pneumatik GmbH
+PN-V31	1	Shuttle Valve, 10mm	VR1220F-10	SMC.VR1220F-10	SMC Pneumatik GmbH
+PN-V32	1	Push-in fitting	QS-10H-6	FESTO.QS-10H-6	Festo AG & Co. KG
+PN-V32	1	Holder	TMH-10	SMC.TMH-10	SMC Pneumatik GmbH
+PN-V32	1	Shuttle Valve, 10mm	VR1220F-10	SMC.VR1220F-10	SMC Pneumatik GmbH
+PN-V33	1	Push-in fitting	QS-10H-6	FESTO.QS-10H-6	Festo AG & Co. KG
+PN-V33	1	Holder	TMH-10	SMC.TMH-10	SMC Pneumatik GmbH
+PN-V33	1	Shuttle Valve, 10mm	VR1220F-10	SMC.VR1220F-10	SMC Pneumatik GmbH
+PN-V34	1	Push-in fitting	QS-10H-6	FESTO.QS-10H-6	Festo AG & Co. KG
+PN-V34	1	Holder	TMH-10	SMC.TMH-10	SMC Pneumatik GmbH
+PN-V34	1	Shuttle Valve, 10mm	VR1220F-10	SMC.VR1220F-10	SMC Pneumatik GmbH

This drawing is exclusive property of Nordson Deutschland Technical Office. It must not in any case be used to the prejudice of his interest.

Nordson Deutschland GmbH
Heinrich-Hertz-Str. 42
40699 Erkrath
Tel.: (+49) 211- 9205-0
Fax.: (+49) 211- 254658
www.nordson.com

Description
Parts list

=
+ PL HDLV Pneumatic

Cover sheet

HDLV Pneumatic

Date	18.01.2018	This drawing is exclusive property of Nordson Deutschland Technical Office. It must not in any case be used to the prejudice of his interest.	Nordson Deutschland GmbH Heinrich-Hertz-Str. 42 40699 Erkrath Tel.: (+49) 211- 9205-0 Fax.: (+49) 211- 254658 www.nordson.com	Description Cover sheet	=		
Editor	Zimmermann				+ A0	HDLV Pneumatic	
Revision	18.01.2018						Page 1
						02-258-554	of 2 Pages

Table of contents

Page	Page description	Supplementary page field	Date	Edited by	X
+A0/1	Cover sheet	1	18.01.2018	Zimmermann	X
+A0/2	Table of contents	2	07.02.2018	Zimmermann	
+PN/1	PNEUMATIK CONNECTIONS	3	06.02.2018	Zimmermann	
+PN/2	PNEUMATIK CONNECTIONS	4	07.02.2018	Zimmermann	
+PN/3	PNEUMATIK CONNECTIONS	5	07.02.2018	Zimmermann	
+PN/4	PNEUMATIK CONNECTIONS	6	07.02.2018	Zimmermann	
+PN/5	PNEUMATIK CONNECTIONS	7	07.02.2018	Zimmermann	
+PN/6	PNEUMATIK CONNECTIONS	8	07.02.2018	Zimmermann	
+PN/7	PNEUMATIK CONNECTIONS	9	07.02.2018	Zimmermann	
+PN/8	PNEUMATIK CONNECTIONS	10	07.02.2018	Zimmermann	
+PL/1	Parts list	11	07.02.2018	Zimmermann	
+PL/2	Parts list	12	07.02.2018	Zimmermann	
+PL/3	Parts list	13	07.02.2018	Zimmermann	

Date	07.02.2018	Description	Table of contents
Editor	Zimmermann	=	
Revision	07.02.2018	+ A0	HDLV Pneumatic
		02-258-554	Page 2 of 2 Pages

This drawing is exclusive property of Nordson Deutschland Technical Office. It must not in any case be used to the prejudice of his interest.

Nordson Deutschland GmbH
Heinrich-Hertz-Str. 42
40699 Erkrath
Tel.: (+49) 211- 9205-0
Fax.: (+49) 211- 254658
www.nordson.com

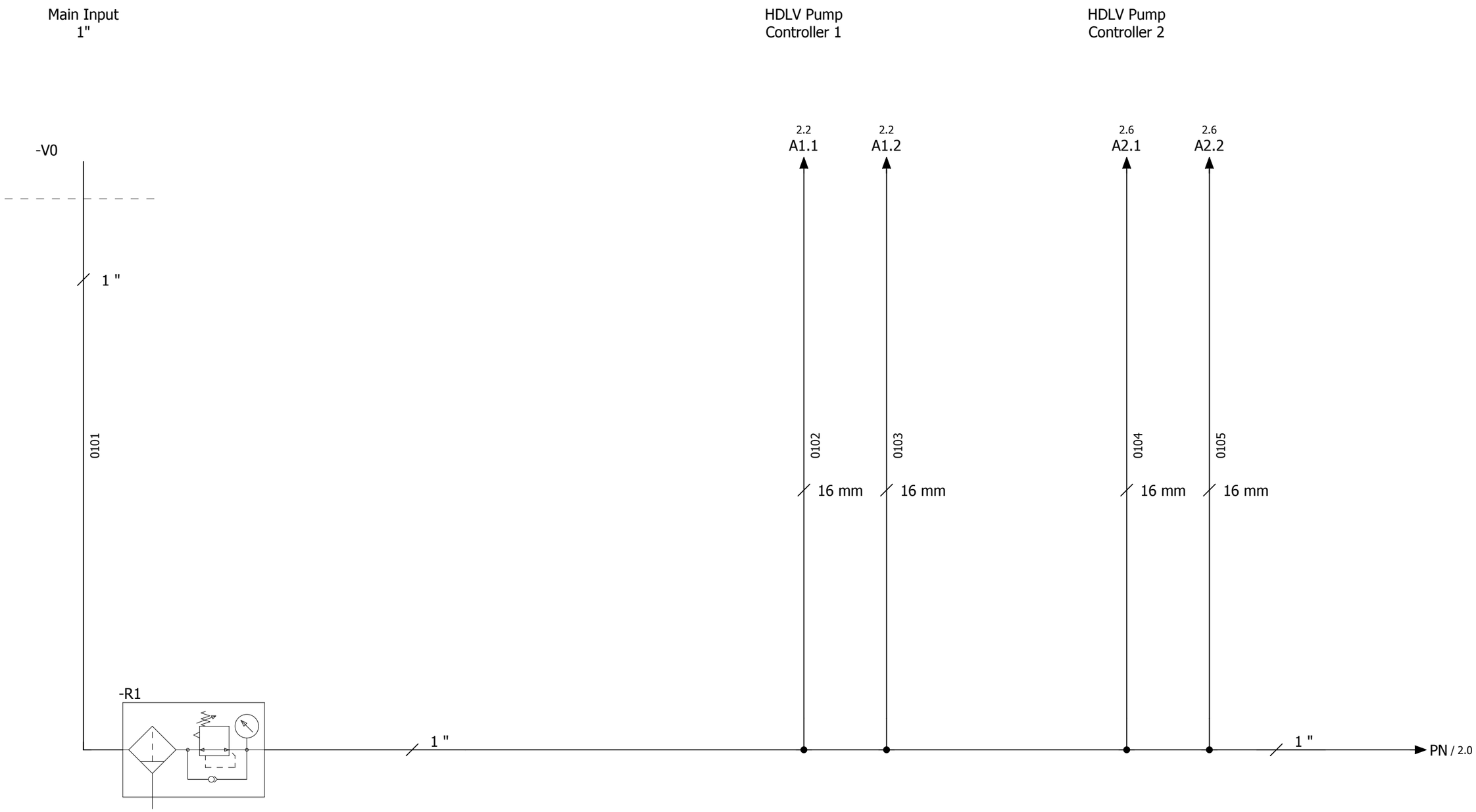

Date	18.01.2018	This drawing is exclusive property of Nordson Deutschland Technical Office. It must not in any case be used to the prejudice of his interest.	Nordson Deutschland GmbH Heinrich-Hertz-Str. 42 40699 Erkrath Tel.: (+49) 211- 9205-0 Fax.: (+49) 211- 254658 www.nordson.com	Description PNEUMATIK CONNECTIONS
Editor	Zimmermann			
Revision	06.02.2018			

=			
+ PN	HDLV Pneumatic		
		Page	1
	02-258-554	of	8 Pages

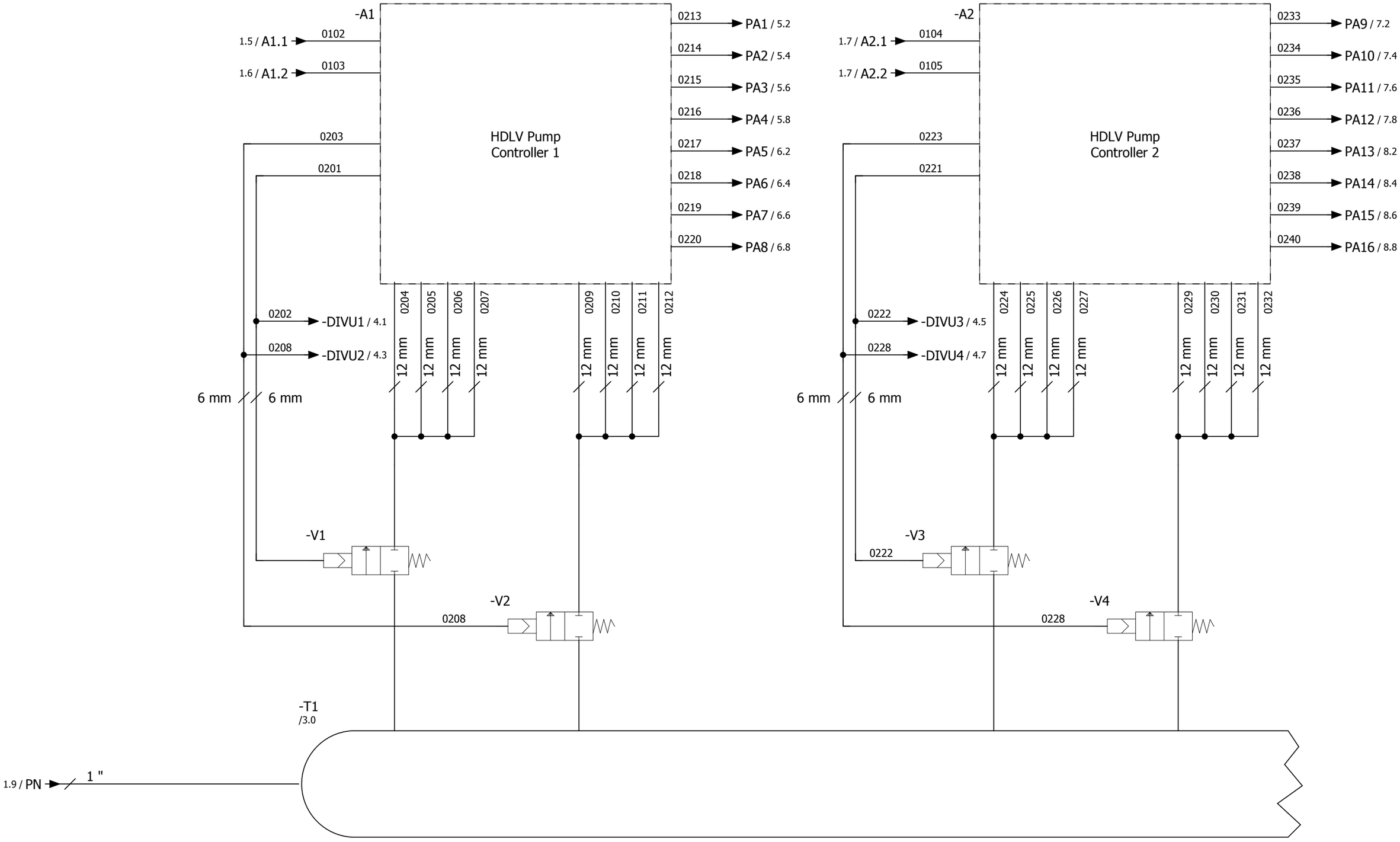

1 3

			Date	18.01.2018	This drawing is exclusive property of Nordson Deutschland Technical Office. It must not in any case be used to the prejudice of his interest.	Nordson Deutschland GmbH Heinrich-Hertz-Str. 42 40699 Erkrath Tel.: (+49) 211- 9205-0 Fax.: (+49) 211- 254658 www.nordson.com	Description PNEUMATIK CONNECTIONS	=	
			Editor	Zimmermann				+ PN	HDLV Pneumatic
			Revision	07.02.2018					Page 2
								02-258-554	of 8 Pages

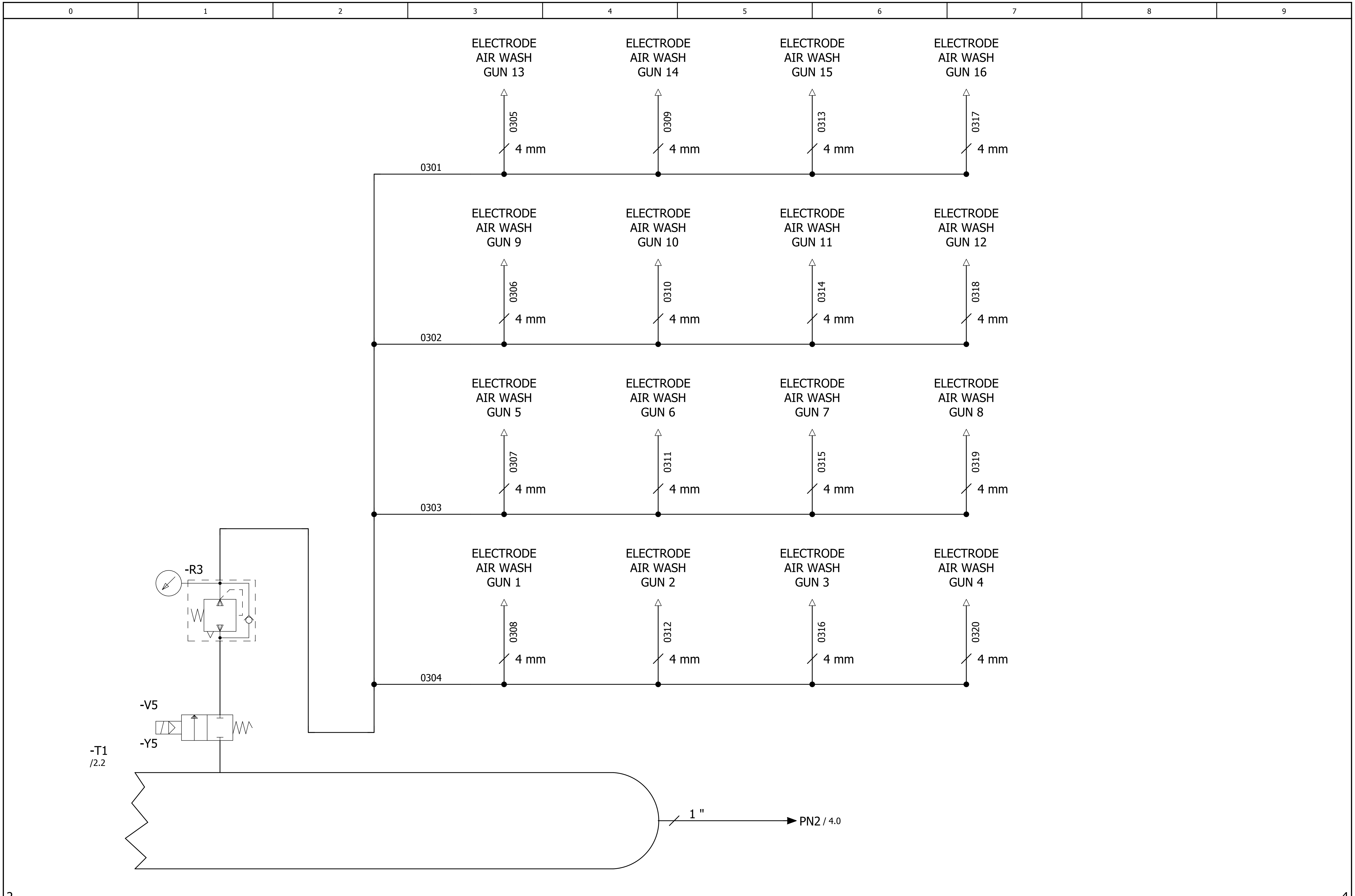

Date	18.01.2018	This drawing is exclusive property of Nordson Deutschland Technical Office. It must not in any case be used to the prejudice of his interest.	Nordson	Nordson Deutschland GmbH Heinrich-Hertz-Str. 42 40699 Erkrath Tel.: (+49) 211- 9205-0 Fax.: (+49) 211- 254658 www.nordson.com	Description PNEUMATIK CONNECTIONS	=		
Editor	Zimmermann					+ PN	HDLV Pneumatic	
Revision	07.02.2018						02-258-554	Page 3 of 8 Pages

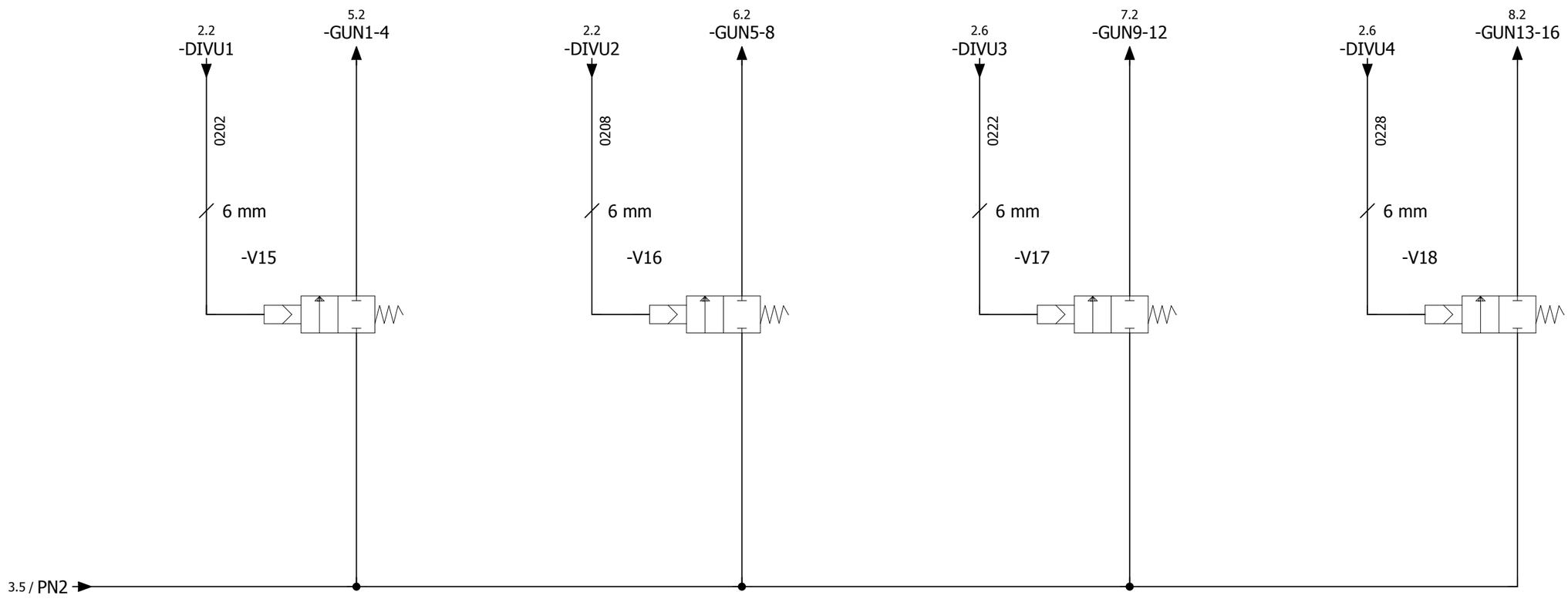

			Date	18.01.2018	This drawing is exclusive property of Nordson Deutschland Technical Office. It must not in any case be used to the prejudice of his interest.	Nordson Deutschland GmbH Heinrich-Hertz-Str. 42 40699 Erkrath Tel.: (+49) 211- 9205-0 Fax.: (+49) 211- 254658 www.nordson.com	Description PNEUMATIK CONNECTIONS	=	
			Editor	Zimmermann				+ PN	HDLV Pneumatic
			Revision	07.02.2018					Page 4
								02-258-554	of 8 Pages

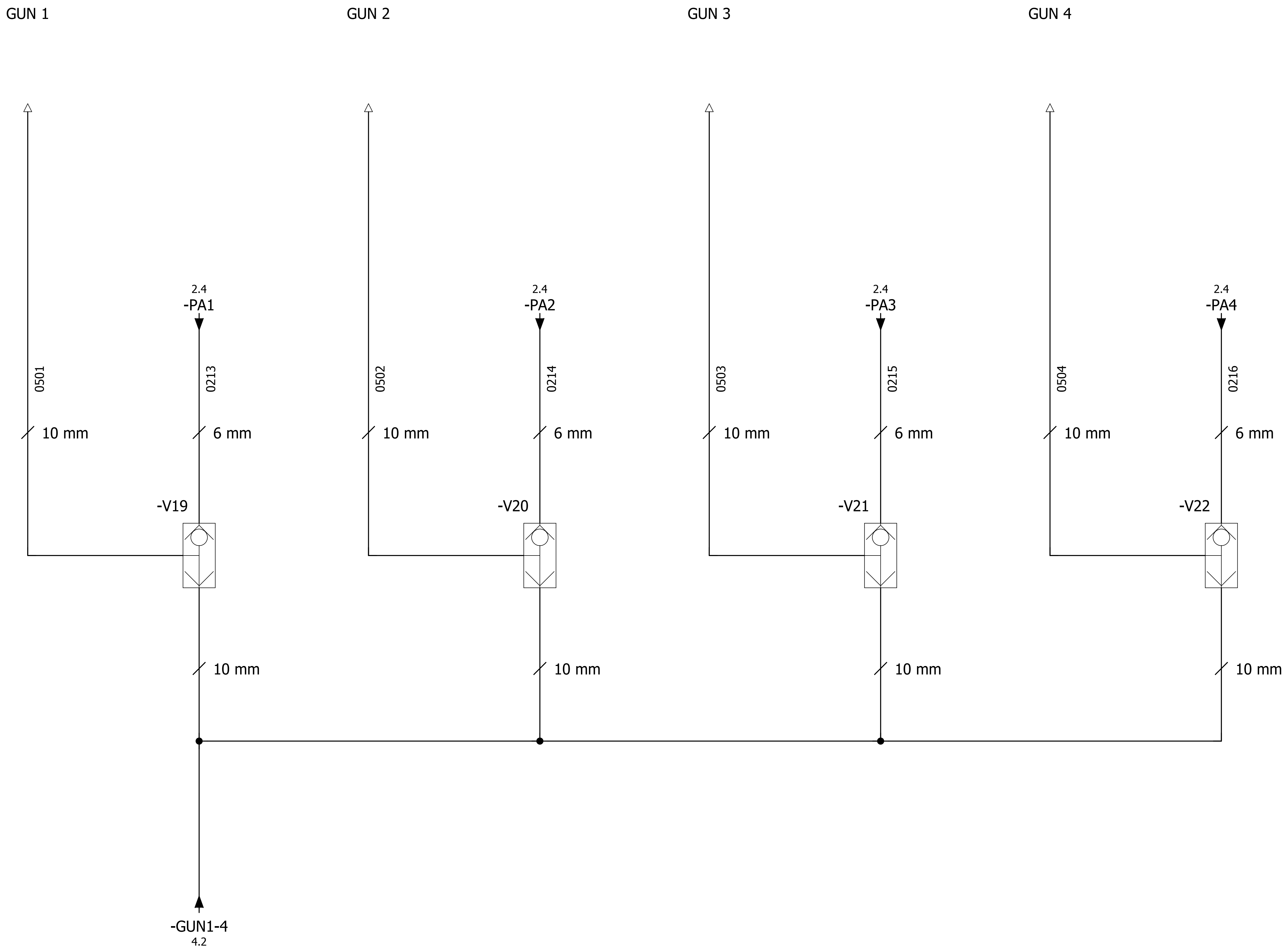

4

6

Date	18.01.2018
Editor	Zimmermann
Revision	07.02.2018

This drawing is exclusive property of Nordson Deutschland Technical Office. It must not in any case be used to the prejudice of his interest.

Nordson

Nordson Deutschland GmbH
Heinrich-Hertz-Str. 42
40699 Erkrath
Tel.: (+49) 211- 9205-0
Fax.: (+49) 211- 254658
www.nordson.com

Description
PNEUMATIK CONNECTIONS

=
+ PN HDLV Pneumatic

02-258-554

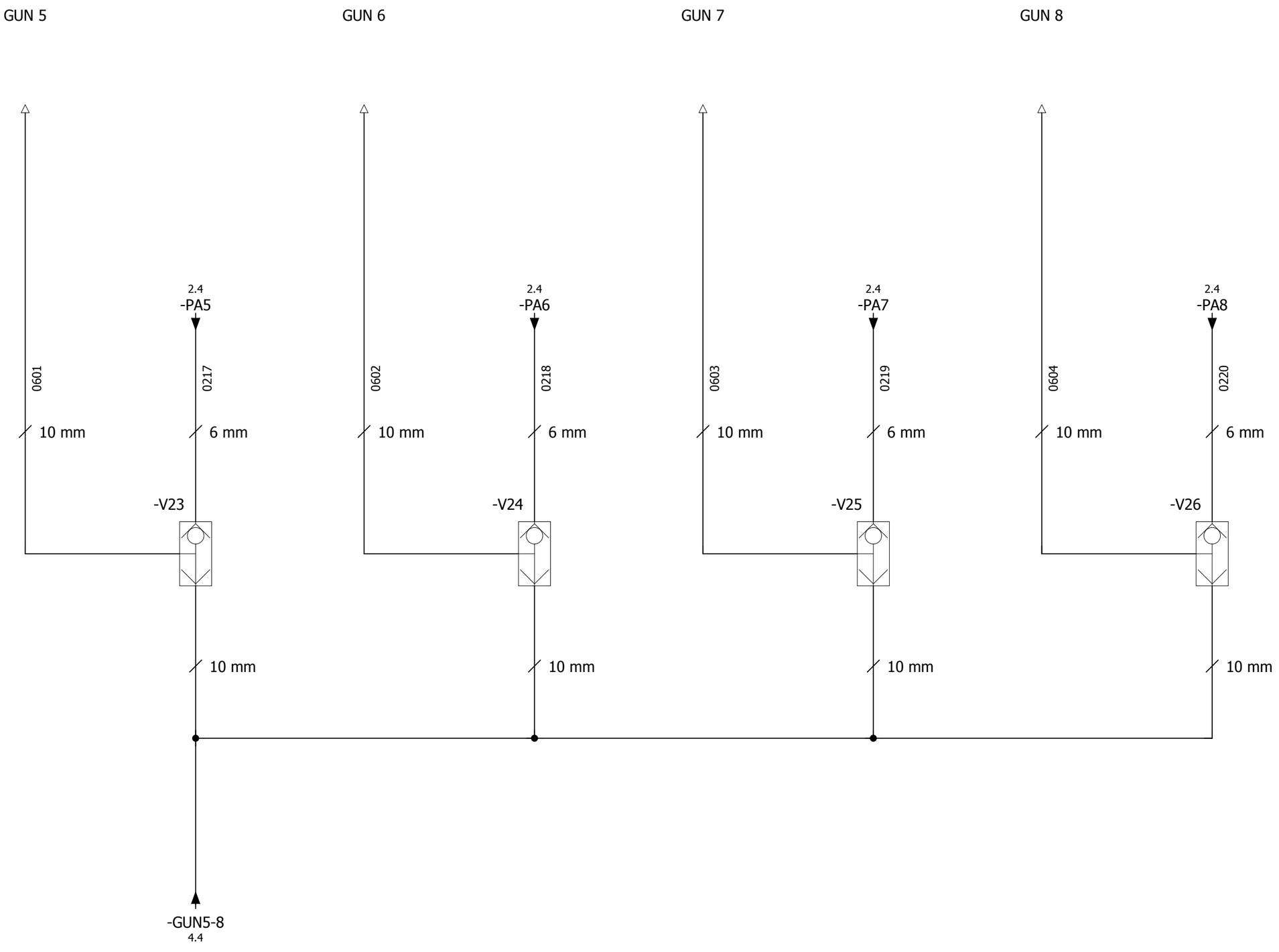

5 7

Date	18.01.2018	This drawing is exclusive property of Nordson Deutschland Technical Office. It must not in any case be used to the prejudice of his interest.	Nordson Deutschland GmbH Heinrich-Hertz-Str. 42 40699 Erkrath Tel.: (+49) 211- 9205-0 Fax.: (+49) 211- 254658 www.nordson.com	Description PNEUMATIK CONNECTIONS
Editor	Zimmermann			
Revision	07.02.2018			

=	
+ PN	HDLV Pneumatic
02-258-554	Page 6 of 8 Pages

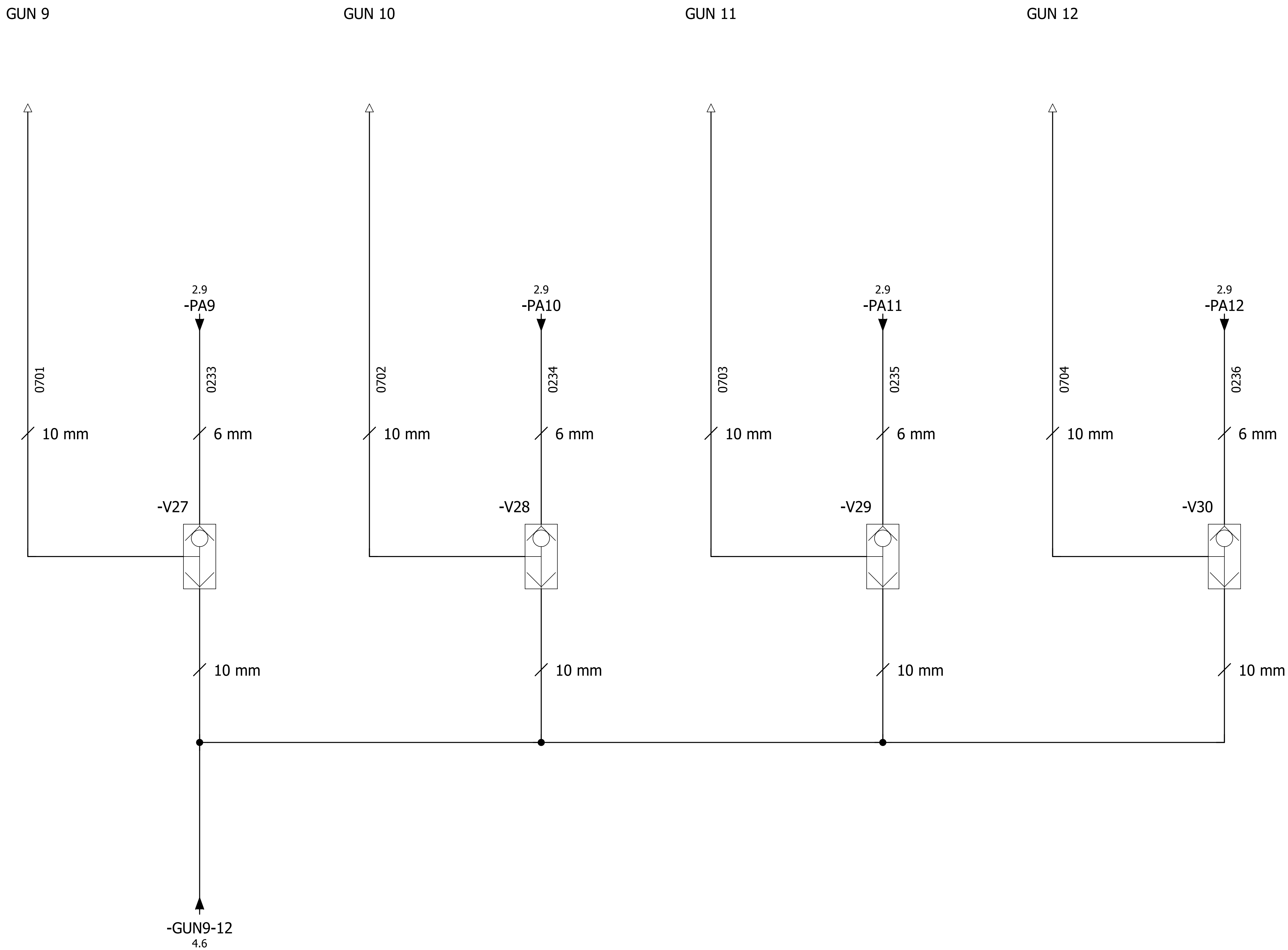

6
8

Date	18.01.2018	This drawing is exclusive property of Nordson Deutschland Technical Office. It must not in any case be used to the prejudice of his interest.	Nordson	Nordson Deutschland GmbH Heinrich-Hertz-Str. 42 40699 Erkrath Tel.: (+49) 211- 9205-0 Fax.: (+49) 211- 254658 www.nordson.com	Description PNEUMATIK CONNECTIONS	=		
Editor	Zimmermann					+ PN	HDLV Pneumatic	
Revision	07.02.2018							Page 7
							02-258-554	of 8 Pages

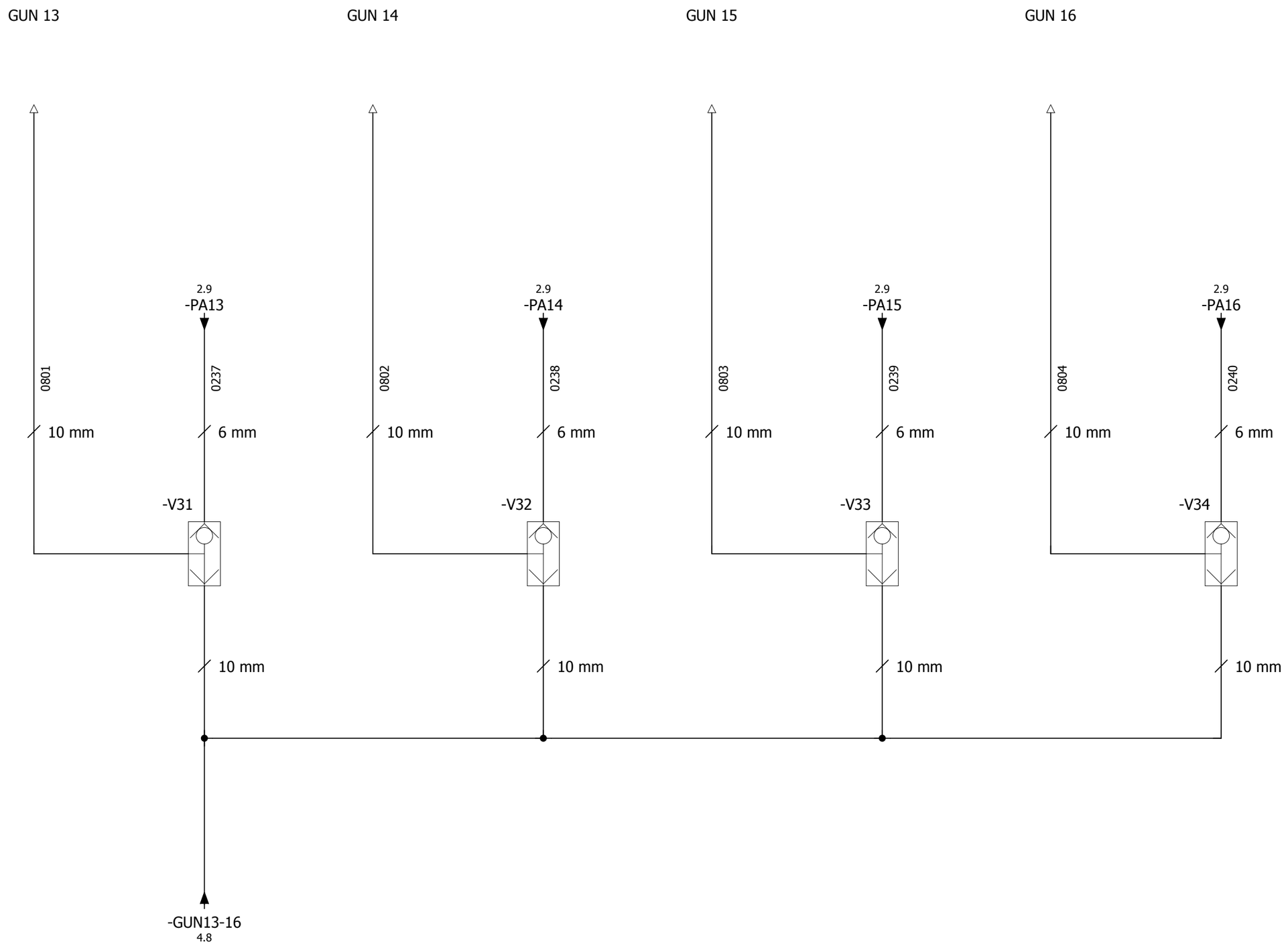

+PL/1

Date	18.01.2018	This drawing is exclusive property of Nordson Deutschland Technical Office. It must not in any case be used to the prejudice of his interest.	
Editor	Zimmermann		
Revision	07.02.2018		

Nordson Deutschland GmbH
Heinrich-Hertz-Str. 42
40699 Erkrath
Tel.: (+49) 211- 9205-0
Fax.: (+49) 211- 254658
www.nordson.com

Description
PNEUMATIK CONNECTIONS

=			
+ PN	HDLV Pneumatic		
		Page	8
	02-258-554	of	8 Pages

Parts list

Device tag	Quantity	Designation	Type number	Part number	Supplier
+PN-A1	8	Y Quick conector 12mm - 2x10mm	KQ2U10-12A	SMC.KQ2U10-12A	SMC Pneumatik GmbH
+PN-A2	8	Y Quick conector 12mm - 2x10mm	KQ2U10-12A	SMC.KQ2U10-12A	SMC Pneumatik GmbH
+PN-R1	1	Filter regulator unit MS9-LFR	MS9-LFR-AGF-D6-C-U-M-AG-BAR-AS-WPM	FESTO.MS9-LFR-AGF-D6-C-U-M-AG-BAR-AS-WPM	Festo AG & Co. KG
+PN-R1	2	Hose Tail 1"-25mm	GT 1025 MSV	JAEGER.GT 1025 MSV	Jaeger Pneumatic
+PN-R1	1	Tube 1" 100mm	RONI 10/100 ST	JAEGER.RONI 10/100 ST	Jaeger Pneumatic
+PN-R1	2	Tube Clamp	SSB 37 ES	JAEGER.SSB 37 ES	Jaeger Pneumatic
+PN-R1	1	T-Piece 1"	TE 10 MSV	JAEGER.TE 10 MSV	Jaeger Pneumatic
+PN-R1	1	Blind Cap 1"	VS 10 A MSV	JAEGER.VS 10 A MSV	Jaeger Pneumatic
+PN-R1	1	Manifold 1" - 4x 1/2"	VTI 104 MSV	JAEGER.VTI 104 MSV	Jaeger Pneumatic
+PN-R1	1	Elbow 1" 90°	W 10 MSV	JAEGER.W 10 MSV	Jaeger Pneumatic
+PN-R1	4	Push In Fitting Elbow 90° 1/2" to 16mm	KQ2L16-04AS	SMC.KQ2L16-04AS	SMC Pneumatik GmbH
+PN-R1	2	Blind Plug 16mm	KQ2P-16	SMC.KQ2P-16	SMC Pneumatik GmbH
+PN-R3	4	Multiple distributor	QSLV4-1/8-4	FESTO.QSLV4-1/8-4	Festo AG & Co. KG
+PN-R3	14	Blanking plug	QSC-4H	FESTO.QSC-4H	Festo AG & Co. KG
+PN-R3	1	Pressure regulator MS4-LR	MS4-LR-AGC-D5-Z	FESTO.MS4-LR-AGC-D5-Z	Festo AG & Co. KG
+PN-R3	1	Double nipple G 1/2"-G 3/8"	DN 1238 MSV	JAEGER.DN 1238 MSV	Jaeger Pneumatic
+PN-R3	1	Distributor bar 2 x G 3/8"-4 x G 1/8"	RLE 43818 A	JAEGER.RLE 43818 A	Jaeger Pneumatic
+PN-R3	1	Blind Cap G 3/8"	VS 38 AMSV	JAEGER.VS 38 AMSV	Jaeger Pneumatic
+PN-T1	1	Double nipple G 1/2"-G 3/8"	DN 1238 MSV	JAEGER.DN 1238 MSV	Jaeger Pneumatic
+PN-T1	1	Pipe clamp	GR 5337 LARPV	JAEGER.GR 5337 LARPV	Jaeger Pneumatic
+PN-T1	1	Hose Tail 1"-25mm	GT 1025 MSV	JAEGER.GT 1025 MSV	Jaeger Pneumatic
+PN-T1	2	Sleeve G 1"-G 1"	MU 10 MSV	JAEGER.MU 10 MSV	Jaeger Pneumatic
+PN-T1	1	Tube 1" 120mm	RONI 10/120 ST	JAEGER.RONI 10/120 ST	Jaeger Pneumatic
+PN-T1	2	Tube 1" 200mm	RONI 10/200 ST	JAEGER.RONI 10/200 ST	Jaeger Pneumatic
+PN-T1	1	Tube Clamp	SSB 37 ES	JAEGER.SSB 37 ES	Jaeger Pneumatic
+PN-T1	5	Blind Cap 1/2"	VK 12 MSV	JAEGER.VK 12 MSV	Jaeger Pneumatic
+PN-T1	1	Blind Cap 1"	VS 10 A MSV	JAEGER.VS 10 A MSV	Jaeger Pneumatic
+PN-T1	1	Blind Cap 1/4"	VS 14 A MSV	JAEGER.VS 14 A MSV	Jaeger Pneumatic
+PN-T1	4	Distributor pipe G 1", 2 outlets G 1/2"	VTA 102 MSV	JAEGER.VTA 102 MSV	Jaeger Pneumatic
+PN-T1	1	Elbow 1" 90°	W 10 MSV	JAEGER.W 10 MSV	Jaeger Pneumatic
+PN-T1	3	Elbow 1" 90°	WE 10 MSV	JAEGER.WE 10 MSV	Jaeger Pneumatic
+PN-T1	1	Elbow 1/2" 90°	WT 12 FES	JAEGER.WT 12 FES	Jaeger Pneumatic
+PN-T1	1	Airtank 6x 1/2"	DP14265R0X0P000A	TURBO.DP14265R0X0P000A	
+PN-V1	1	Multiple distributor	QSLV4-1/2-12	FESTO.QSLV4-1/2-12	Festo AG & Co. KG
+PN-V1	1	Plug in fitting	QSMT-M5-6	FESTO.QSMT-M5-6	Festo AG & Co. KG
+PN-V1	1	Solenoid valve	VLX-2-1/2-MS	FESTO.VLX-2-1/2-MS	Festo AG & Co. KG
+PN-V2	1	Multiple distributor	QSLV4-1/2-12	FESTO.QSLV4-1/2-12	Festo AG & Co. KG
+PN-V2	1	Plug in fitting	QSMT-M5-6	FESTO.QSMT-M5-6	Festo AG & Co. KG

This drawing is exclusive property of Nordson Deutschland Technical Office. It must not in any case be used to the prejudice of his interest.

Nordson
Nordson Deutschland GmbH
Heinrich-Hertz-Str. 42
40699 Erkrath
Tel.: (+49) 211- 9205-0
Fax.: (+49) 211- 254658
www.nordson.com

Description
Parts list

Parts list

Device tag	Quantity	Designation	Type number	Part number	Supplier
+PN-V2	1	Solenoid valve	VLX-2-1/2-MS	FESTO.VLX-2-1/2-MS	Festo AG & Co. KG
+PN-V3	1	Multiple distributor	QSLV4-1/2-12	FESTO.QSLV4-1/2-12	Festo AG & Co. KG
+PN-V3	1	Plug in fitting	QSMT-M5-6	FESTO.QSMT-M5-6	Festo AG & Co. KG
+PN-V3	1	Solenoid valve	VLX-2-1/2-MS	FESTO.VLX-2-1/2-MS	Festo AG & Co. KG
+PN-V4	1	Multiple distributor	QSLV4-1/2-12	FESTO.QSLV4-1/2-12	Festo AG & Co. KG
+PN-V4	1	Plug in fitting	QSMT-M5-6	FESTO.QSMT-M5-6	Festo AG & Co. KG
+PN-V4	1	Solenoid valve	VLX-2-1/2-MS	FESTO.VLX-2-1/2-MS	Festo AG & Co. KG
+PN-V4	2	Blanking plug	QSC-12H	FESTO.QSC-12H	Festo AG & Co. KG
+PN-V5	1	Solenoid	MD-2-24VDC-PA	FESTO.MD-2-24VDC-PA	Festo AG & Co. KG
+PN-V5	1	Connecting plug for solenoid and valve	MSSD-N	FESTO.MSSD-N	Festo AG & Co. KG
+PN-V5	1	Double nipple G 1/2"-G 3/8"	DN 1238 MSV	JAEGER.DN 1238 MSV	Jaeger Pneumatic
+PN-V15	1	Multiple distributor	QSLV4-3/8-10	FESTO.QSLV4-3/8-10	Festo AG & Co. KG
+PN-V15	1	Push-in/threaded L-fitting	QSML-M5-6	FESTO.QSML-M5-6	
+PN-V15	1	Solenoid valve	VLX-2-1/2-MS	FESTO.VLX-2-1/2-MS	Festo AG & Co. KG
+PN-V15	1	Reducing nipple G 1/2"-G 3/8"	RN 1238 MSV	JAEGER.RN 1238 MSV	Jaeger Pneumatic
+PN-V16	1	Multiple distributor	QSLV4-3/8-10	FESTO.QSLV4-3/8-10	Festo AG & Co. KG
+PN-V16	1	Push-in/threaded L-fitting	QSML-M5-6	FESTO.QSML-M5-6	
+PN-V16	1	Solenoid valve	VLX-2-1/2-MS	FESTO.VLX-2-1/2-MS	Festo AG & Co. KG
+PN-V16	1	Reducing nipple G 1/2"-G 3/8"	RN 1238 MSV	JAEGER.RN 1238 MSV	Jaeger Pneumatic
+PN-V17	1	Multiple distributor	QSLV4-3/8-10	FESTO.QSLV4-3/8-10	Festo AG & Co. KG
+PN-V17	1	Push-in/threaded L-fitting	QSML-M5-6	FESTO.QSML-M5-6	
+PN-V17	1	Solenoid valve	VLX-2-1/2-MS	FESTO.VLX-2-1/2-MS	Festo AG & Co. KG
+PN-V17	1	Reducing nipple G 1/2"-G 3/8"	RN 1238 MSV	JAEGER.RN 1238 MSV	Jaeger Pneumatic
+PN-V18	1	Multiple distributor	QSLV4-3/8-10	FESTO.QSLV4-3/8-10	Festo AG & Co. KG
+PN-V18	1	Push-in/threaded L-fitting	QSML-M5-6	FESTO.QSML-M5-6	
+PN-V18	1	Solenoid valve	VLX-2-1/2-MS	FESTO.VLX-2-1/2-MS	Festo AG & Co. KG
+PN-V18	1	Reducing nipple G 1/2"-G 3/8"	RN 1238 MSV	JAEGER.RN 1238 MSV	Jaeger Pneumatic
+PN-V18	2	Blanking plug	QSC-10H	FESTO.QSC-10H	Festo AG & Co. KG
+PN-V19	1	Push-in fitting	QS-10H-6	FESTO.QS-10H-6	Festo AG & Co. KG
+PN-V19	1	Holder	TMH-10	SMC.TMH-10	SMC Pneumatik GmbH
+PN-V19	1	Shuttle Valve, 10mm	VR1220F-10	SMC.VR1220F-10	SMC Pneumatik GmbH
+PN-V20	1	Push-in fitting	QS-10H-6	FESTO.QS-10H-6	Festo AG & Co. KG
+PN-V20	1	Holder	TMH-10	SMC.TMH-10	SMC Pneumatik GmbH
+PN-V20	1	Shuttle Valve, 10mm	VR1220F-10	SMC.VR1220F-10	SMC Pneumatik GmbH
+PN-V21	1	Push-in fitting	QS-10H-6	FESTO.QS-10H-6	Festo AG & Co. KG
+PN-V21	1	Holder	TMH-10	SMC.TMH-10	SMC Pneumatik GmbH
+PN-V21	1	Shuttle Valve, 10mm	VR1220F-10	SMC.VR1220F-10	SMC Pneumatik GmbH
+PN-V22	1	Push-in fitting	QS-10H-6	FESTO.QS-10H-6	Festo AG & Co. KG

This drawing is exclusive property of Nordson Deutschland Technical Office. It must not in any case be used to the prejudice of his interest.

Nordson Deutschland GmbH
Heinrich-Hertz-Str. 42
40699 Erkrath
Tel.: (+49) 211- 9205-0
Fax.: (+49) 211- 254658
www.nordson.com

Parts list

Device tag	Quantity	Designation	Type number	Part number	Supplier
+PN-V22	1	Holder	TMH-10	SMC.TMH-10	SMC Pneumatik GmbH
+PN-V22	1	Shuttle Valve, 10mm	VR1220F-10	SMC.VR1220F-10	SMC Pneumatik GmbH
+PN-V23	1	Push-in fitting	QS-10H-6	FESTO.QS-10H-6	Festo AG & Co. KG
+PN-V23	1	Holder	TMH-10	SMC.TMH-10	SMC Pneumatik GmbH
+PN-V23	1	Shuttle Valve, 10mm	VR1220F-10	SMC.VR1220F-10	SMC Pneumatik GmbH
+PN-V24	1	Push-in fitting	QS-10H-6	FESTO.QS-10H-6	Festo AG & Co. KG
+PN-V24	1	Holder	TMH-10	SMC.TMH-10	SMC Pneumatik GmbH
+PN-V24	1	Shuttle Valve, 10mm	VR1220F-10	SMC.VR1220F-10	SMC Pneumatik GmbH
+PN-V25	1	Push-in fitting	QS-10H-6	FESTO.QS-10H-6	Festo AG & Co. KG
+PN-V25	1	Holder	TMH-10	SMC.TMH-10	SMC Pneumatik GmbH
+PN-V25	1	Shuttle Valve, 10mm	VR1220F-10	SMC.VR1220F-10	SMC Pneumatik GmbH
+PN-V26	1	Push-in fitting	QS-10H-6	FESTO.QS-10H-6	Festo AG & Co. KG
+PN-V26	1	Holder	TMH-10	SMC.TMH-10	SMC Pneumatik GmbH
+PN-V26	1	Shuttle Valve, 10mm	VR1220F-10	SMC.VR1220F-10	SMC Pneumatik GmbH
+PN-V27	1	Push-in fitting	QS-10H-6	FESTO.QS-10H-6	Festo AG & Co. KG
+PN-V27	1	Holder	TMH-10	SMC.TMH-10	SMC Pneumatik GmbH
+PN-V27	1	Shuttle Valve, 10mm	VR1220F-10	SMC.VR1220F-10	SMC Pneumatik GmbH
+PN-V28	1	Push-in fitting	QS-10H-6	FESTO.QS-10H-6	Festo AG & Co. KG
+PN-V28	1	Holder	TMH-10	SMC.TMH-10	SMC Pneumatik GmbH
+PN-V28	1	Shuttle Valve, 10mm	VR1220F-10	SMC.VR1220F-10	SMC Pneumatik GmbH
+PN-V29	1	Push-in fitting	QS-10H-6	FESTO.QS-10H-6	Festo AG & Co. KG
+PN-V29	1	Holder	TMH-10	SMC.TMH-10	SMC Pneumatik GmbH
+PN-V29	1	Shuttle Valve, 10mm	VR1220F-10	SMC.VR1220F-10	SMC Pneumatik GmbH
+PN-V30	1	Push-in fitting	QS-10H-6	FESTO.QS-10H-6	Festo AG & Co. KG
+PN-V30	1	Holder	TMH-10	SMC.TMH-10	SMC Pneumatik GmbH
+PN-V30	1	Shuttle Valve, 10mm	VR1220F-10	SMC.VR1220F-10	SMC Pneumatik GmbH
+PN-V31	1	Push-in fitting	QS-10H-6	FESTO.QS-10H-6	Festo AG & Co. KG
+PN-V31	1	Holder	TMH-10	SMC.TMH-10	SMC Pneumatik GmbH
+PN-V31	1	Shuttle Valve, 10mm	VR1220F-10	SMC.VR1220F-10	SMC Pneumatik GmbH
+PN-V32	1	Push-in fitting	QS-10H-6	FESTO.QS-10H-6	Festo AG & Co. KG
+PN-V32	1	Holder	TMH-10	SMC.TMH-10	SMC Pneumatik GmbH
+PN-V32	1	Shuttle Valve, 10mm	VR1220F-10	SMC.VR1220F-10	SMC Pneumatik GmbH
+PN-V33	1	Push-in fitting	QS-10H-6	FESTO.QS-10H-6	Festo AG & Co. KG
+PN-V33	1	Holder	TMH-10	SMC.TMH-10	SMC Pneumatik GmbH
+PN-V33	1	Shuttle Valve, 10mm	VR1220F-10	SMC.VR1220F-10	SMC Pneumatik GmbH
+PN-V34	1	Push-in fitting	QS-10H-6	FESTO.QS-10H-6	Festo AG & Co. KG
+PN-V34	1	Holder	TMH-10	SMC.TMH-10	SMC Pneumatik GmbH
+PN-V34	1	Shuttle Valve, 10mm	VR1220F-10	SMC.VR1220F-10	SMC Pneumatik GmbH

This drawing is exclusive property of Nordson Deutschland Technical Office. It must not in any case be used to the prejudice of his interest.

Nordson Deutschland GmbH
Heinrich-Hertz-Str. 42
40699 Erkrath
Tel.: (+49) 211- 9205-0
Fax.: (+49) 211- 254658
www.nordson.com

Description
Parts list

=
+ PL HDLV Pneumatic