Instruction Sheet
Document Number 1628524-02
- English (Original) -

Dual Encore® Inline Powder Feed Pump

WARNING: Allow only qualified personnel to perform the following tasks. Follow the safety instructions in this document and all other related documentation.

Description

Dual Encore® inline powder pumps are used in powder feed centers to draw powder from a container, atomize the powder stream, and transfer it to powder spray applicators. The pumps are installed on the walls of the feed center and can be used with 12.7-mm or 1/2-in. Nordson® anti static powder feed hose. Selectable purge technology allows integrated valves to facilitate automatic purging to clean the pumps for color changes.

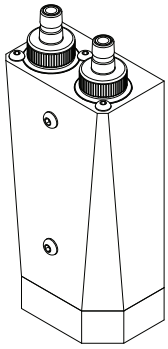

Figure 1 Dual Encore Inline Powder Feed Pump

Dual Inline Pump Replacement

WARNING: To prevent personal injury or damage to equipment, the pump must be purged and depressurized prior to removal.

See Figure 2 through Figure 5.

1. Purge the dual inline pump. Refer to *Maintenance, Depressurization and Purge Procedure* for additional information regarding the purge procedure.
2. See Figure 2. Remove the siphon rod (1) from the powder box (3), blow-off excess powder from the rod with the air applicator (4) and insert it into the cleaning port (2).
3. See Figure 3. Carefully remove the 10 tubes from the rear of the dual inline pump.
4. See Figure 4. Remove the clamps securing the delivery hoses (7) to the barb fittings located at the top of the dual inline pump (6).
5. Remove the delivery hoses (7).
6. Disconnect the siphon tubes (5) from the fittings located at the bottom of the dual inline pump (6).
7. See Figure 5. Utilizing a 4 mm hex key, remove the screws (8) securing the dual inline pump (6) to the feed center.
8. Installation of the dual inline pump is in the reverse order of removal.

NOTE: Securely tighten the screws (8) attaching the dual inline pump to the feed center.

© 2026 Nordson Corporation

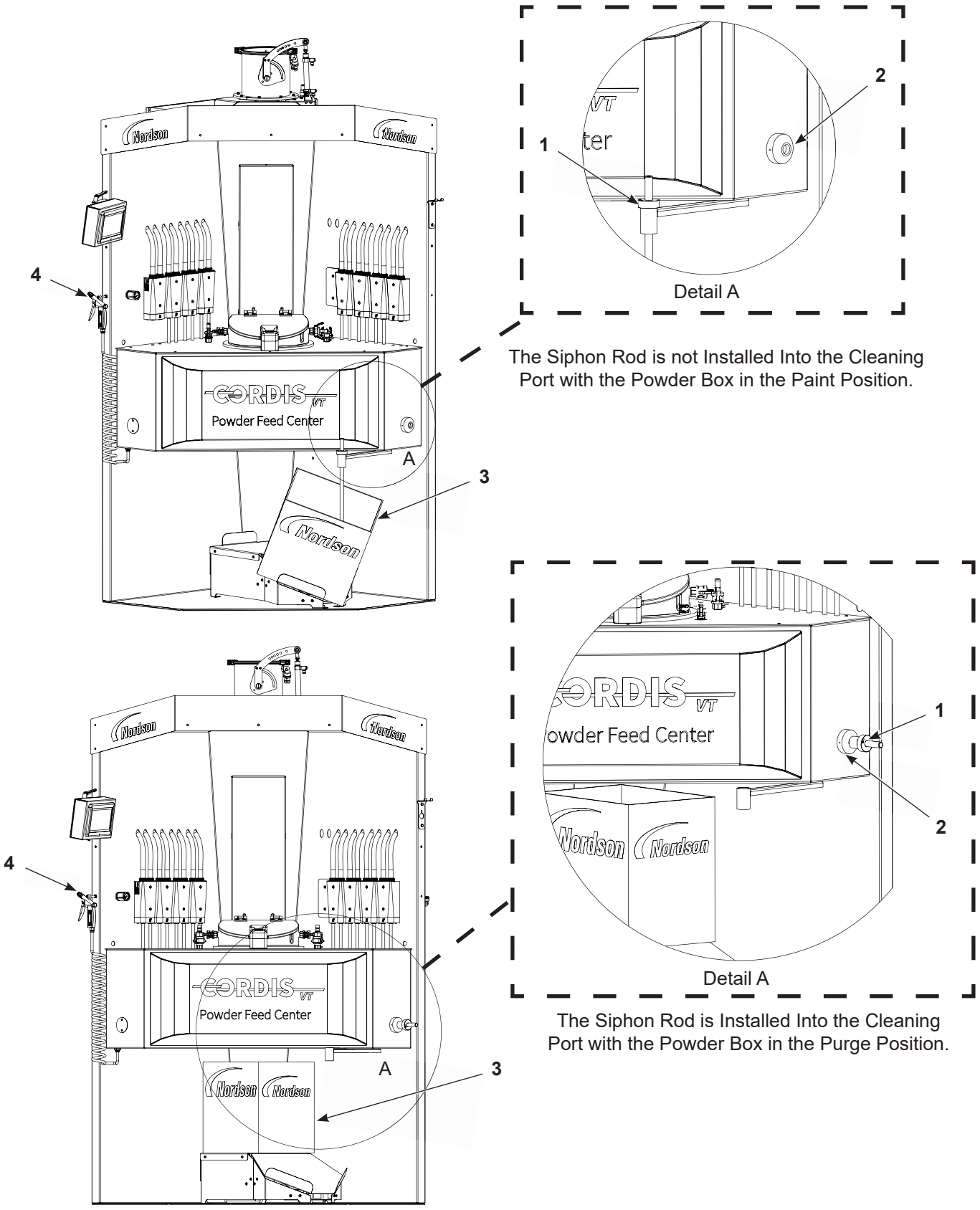

Figure 2 Siphon Rod Positioning (Feed Center Front View)

1. Siphon rod
2. Cleaning port
3. Powder box
4. Air applicator

© 2026 Nordson Corporation

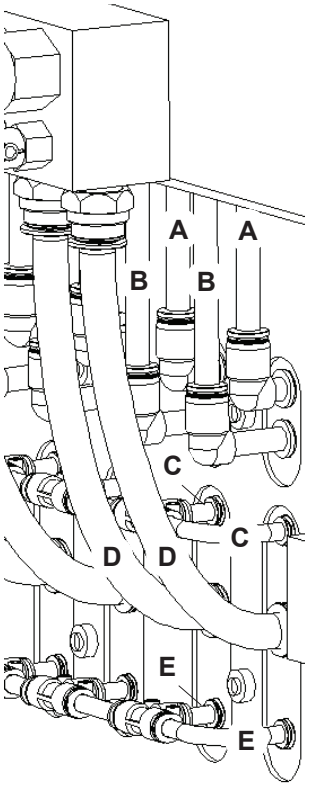

Note: The removal of air tubes from only one dual inline pump is shown for illustrative purposes only.

Callout	Description	Size (mm)	Qty.
A	Atomizing Air Tubing	8	2
B	Flow Air Tubing	8	2
C	Upper Pinch Tubing	6	2
D	Purge Tubing	12	2
E	Lower Pinch Tubing	6	2

REAR VIEW

Figure 3 Tubing Removal From Dual Inline Pump

© 2026 Nordson Corporation

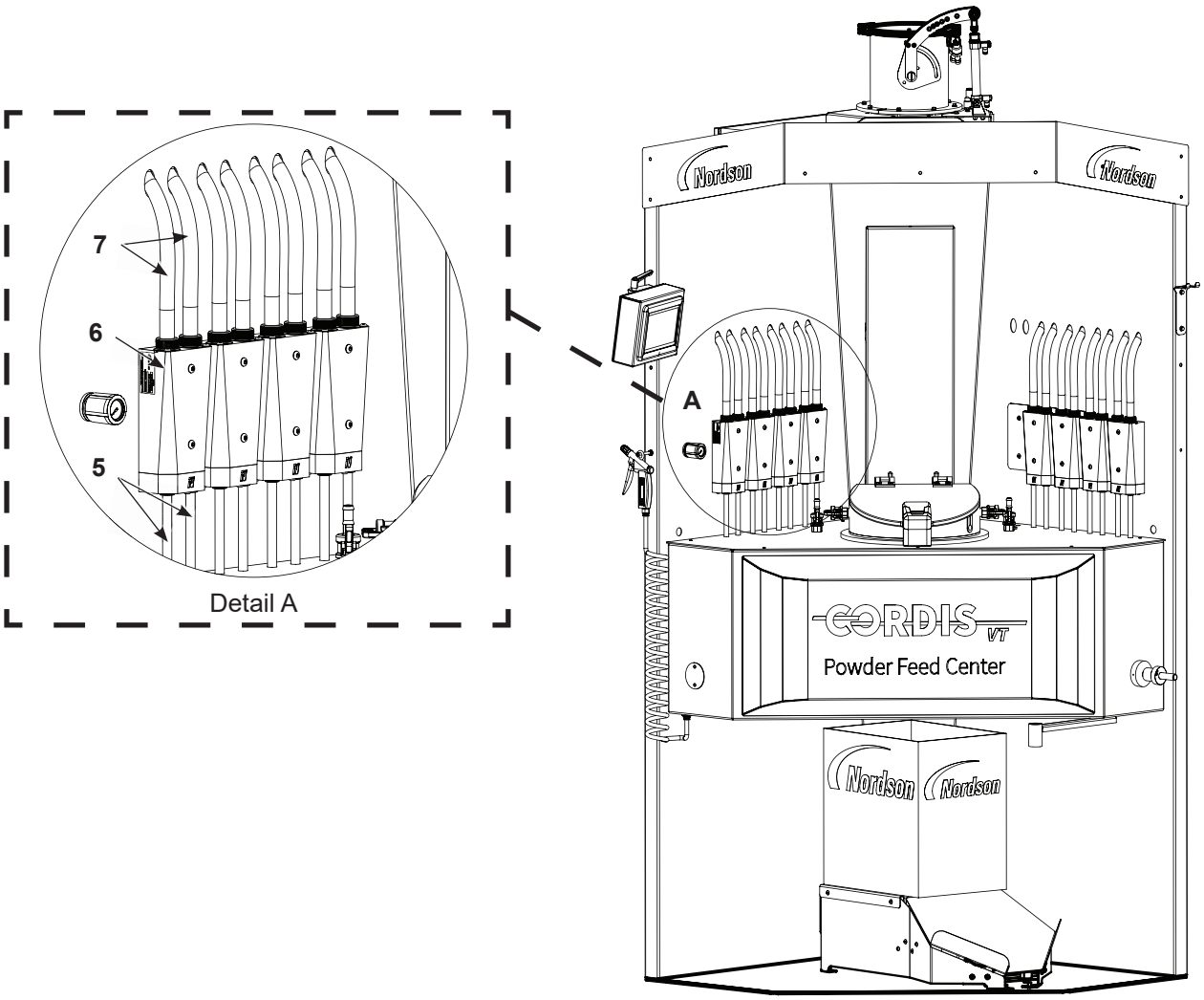

Figure 4 Tubing Removal From Dual Inline Pumps (Feed Center Front View)

5. Siphon tube
6. Dual inline pump
7. Delivery hose

© 2026 Nordson Corporation

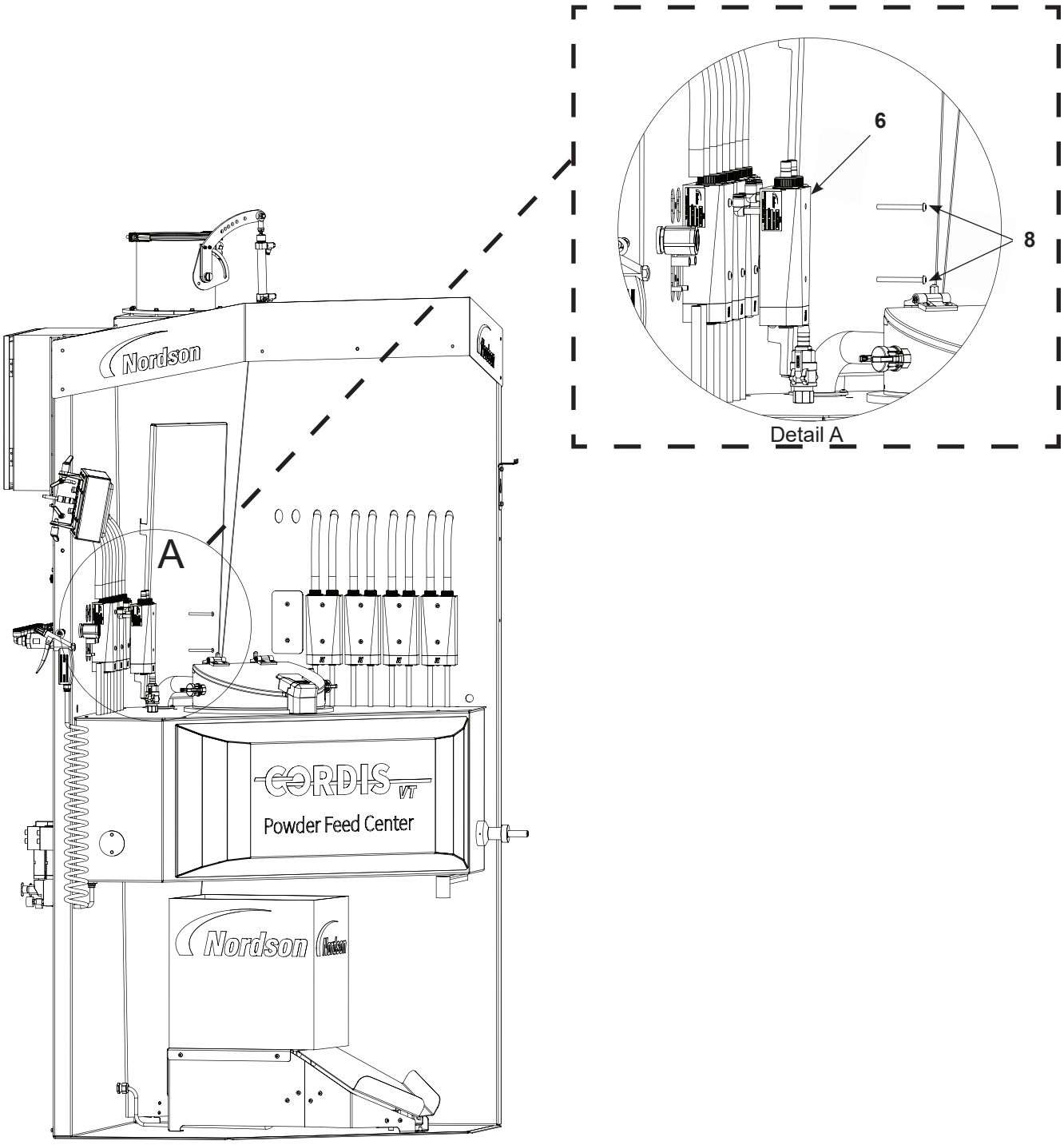

Figure 5 Removal of Dual Inline Pump from Feed Center (Front View)

6. Dual inline pump

8. Screws

© 2026 Nordson Corporation

Operation

WARNING: All conductive equipment in the spray area must be connected to a true earth ground. Ungrounded, or poorly grounded equipment can become electrically charged and cause a severe shock or create sparks hot enough to cause a fire or explosion.

Operating air pressures are determined by system variables, including powder feed hose type and size, spray gun type, powder type, conveyor speed, and desired film build.

The following air flows are average starting points. Adjust air flows to achieve the desired powder delivery volume and density.

Atomizing Air: 1.7 m3/hr (1.0 cfm)

Flow-Rate Air: 2.5 m3/hr (1.5 cfm)

Maintenance

CAUTION:

- Always blow out the powder feed hose from the pump end. Make sure that the booth exhaust fan is operating.
- Do not scrape impact-fused powder off the pump parts with any sharp or hard tools. Powder will build up in any scratches on the powder contact surfaces, causing impact fusion and pump clogging.

Daily Purge the pumps when performing either a color change or system shutdown. Refer to the applicable powder feed center manual for additional information.

Periodically Disassemble the pumps and clean associated parts following these guidelines:

Use low-pressure compressed air and lint-free cloths. Inspect all parts and replace any that are worn or damaged. Clean the parts with an ultrasonic cleaner and an emulsion cleaning solution as described in the *Recommended Cleaning Procedure*.

© 2026 Nordson Corporation

Depressurization and Purge Procedure

Automatic Spray Applicators

Utilize the feed center controller to depressurize and purge the automatic spray applicators. Refer to the *Cordis™ Feed Center Manual (1628981)* for additional information.

Manual Spray Applicators

1. Point the manual spray applicator into the powder booth and release the spray trigger.
2. Press and hold the purge button located on the spray gun. Refer to the applicable *Encore Powder Spray Gun* manual for additional information.
3. Purge the gun until powder ceases to spray from the nozzle.

Recommended Cleaning Procedure

Nordson recommends using an ultrasonic cleaning machine and Oakite® BetaSolv® emulsion cleaner to clean powder pumps.

NOTE: The tip of the injector must be clean and undamaged. The injector directs the air flow directly into the center of the venturi throat. Any obstruction or damage to the injector will produce an off-center air stream that wears a non-uniform pattern in the throat and reduces its usable life.

1. Fill an ultrasonic cleaner with BetaSolv or an equivalent emulsion cleaning solution at room temperature. Do not heat the cleaning solution.
2. Disassemble the pump and remove the O-rings. Blow-off the pump parts.

CAUTION:

- Do not allow the O-rings to come in contact with the cleaning solution. Place the pump parts in the ultrasonic cleaner and run the cleaner until all parts are clean and free of impact fusion.
- Rinse all parts in clean water and dry before re-assembling the pump. Inspect the O-rings and replace any that are damaged.

© 2026 Nordson Corporation

Pump Repair

See Figure 6 through Figure 10.

Remove the pump from the feed center. Refer to the *Dual Inline Pump Replacement* procedure above.

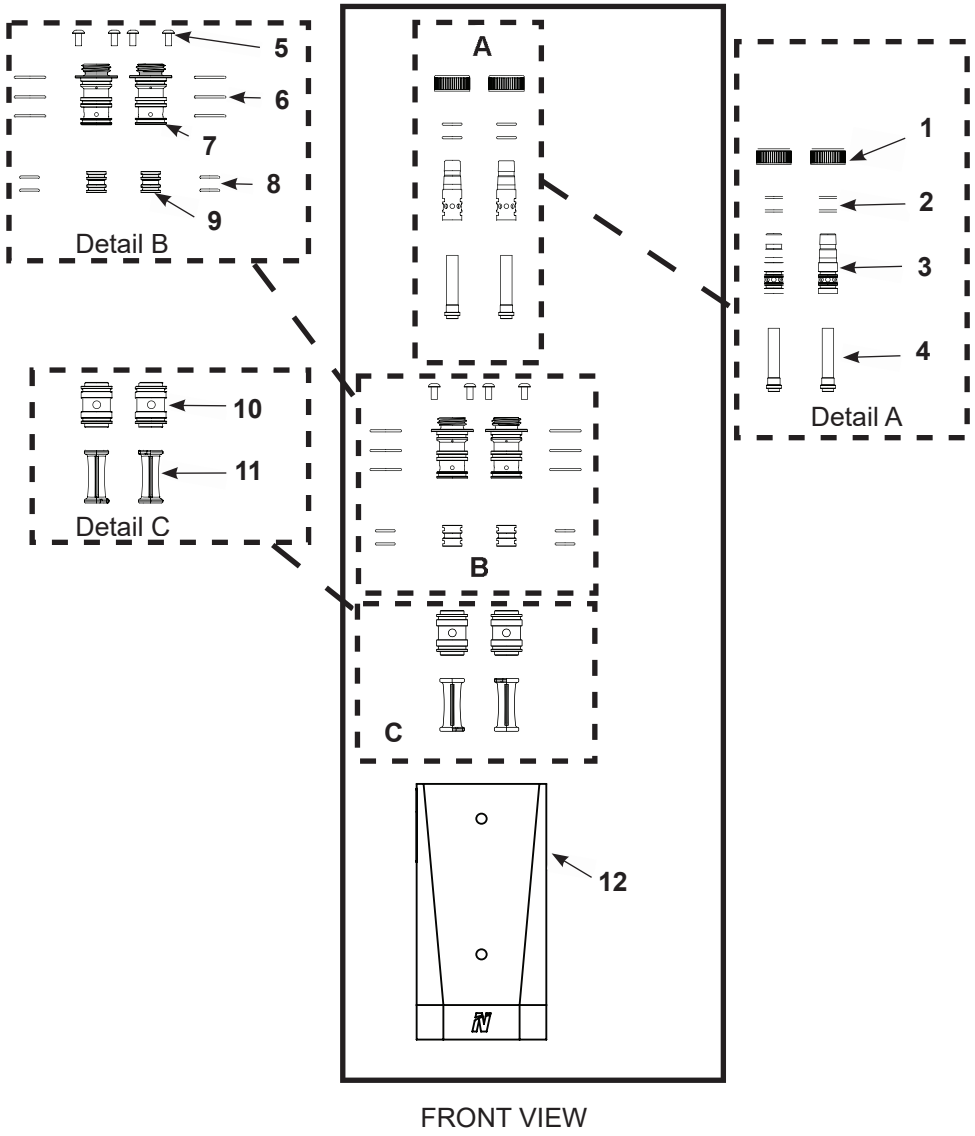

Figure 6 Upper Component Replacement - Dual Inline Pump

1. Nut
2. Throat holder conductive O-ring (0.50 X 0.62 in.)
3. Throat holder
4. Venturi throat
5. Screw
6. Cartridge O-ring (0.88 X1.00 in.)
7. Cartridge
8. Injector O-ring (0.50 X 0.63 in.)
9. Injector
10. Upper pinch valve cage
11. Pinch valve
12. Dual inline pump body

© 2026 Nordson Corporation

Venturi Throat Replacement

1. Refer to Figure 6. Unscrew and remove the nuts (1).
2. With a slight twisting motion, pull the throat holders (3) and venturi throats (4) from the dual inline pump body (12).

CAUTION:

- Inspect the throat holders (3) and the throat holder conductive O-rings (2) for wear or damage.
- Replace any worn or damaged parts.
- Utilize a soft pick or equivalent tool to remove O-rings, if necessary.

3. Remove the venturi throats (4).

NOTE: Installation of the venturi throats (4) are in the reverse order of removal.

CAUTION:

- Install new throat holders (3) over the venturi throats (4), and push the components into the dual inline pump body (12) with a slight twisting motion.
- Install the nuts (1) over the throat holders (3) and thread it onto the body.
- Hand tighten the nuts until they are secure.

Cartridge and Injector Replacement

1. Refer to Figure 6. Remove the venturi throats (4). Refer to *Venturi Throat Replacement* (above) for additional information.
2. Remove the screws (5) securing the cartridges (7) to the body of the dual inline pump (12).
3. Utilize a pry tool or equivalent to lift the cartridges (7) from the dual inline pump body (12), if necessary.

NOTE: See Figure 7. The cartridge (7) is removed from dual inline pump body with the injector (9) as an assembly.

CAUTION: Be sure not to damage the surface of the dual inline pump body with the pry tool as the cartridge (7) is removed.

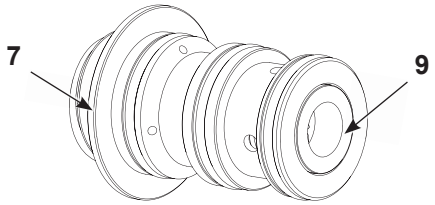

Figure 7 Cartridge and Injector Replacement (1 of 4)

7. Cartridge
9. Injector

© 2026 Nordson Corporation

4. See Figure 8 and Figure 9. Align the injector extraction tool (13) with the cartridge (7) and injector (9).
5. See Figure 9. Insert the injector extraction tool (13) into the injector (9).
6. Rotate the injector extraction tool (13) clockwise until it engages firmly with the injector (9).
7. See Figure 10. Pull the tool to separate the injector (9) from the cartridge (7).

CAUTION:

- Refer to Figure 6. Inspect the injectors (9) and the injector O-rings (8) for wear or damage.
- Inspect the cartridges (7) and the cartridge O-rings (6) for wear or damage.
- Replace any worn or damaged parts.
- Utilize a soft pick or equivalent tool to remove O-rings, if necessary.

8. Re-install the injector to the cartridge and then reinstall the cartridge/injector assembly into the dual inline pump.

NOTE: Installation of the cartridge and injector is in the reverse order of removal.

CAUTION:

- Securely tighten the screws attaching the cartridges (7) to the dual inline pump until they are secure.

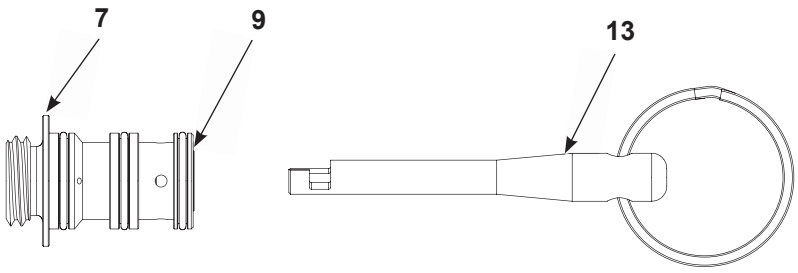

Figure 8 Cartridge and Injector Replacement (2 of 4)

7. Cartridge
9. Injector
13. Injector extraction tool

© 2026 Nordson Corporation

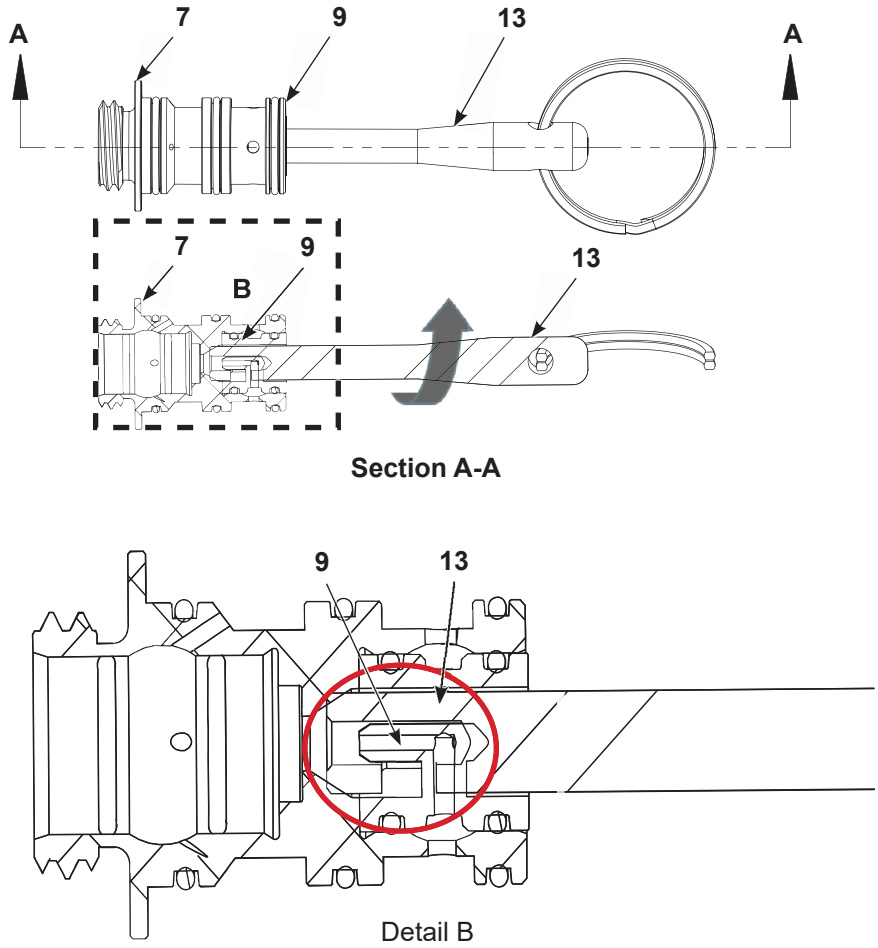

Figure 9 Cartridge and Injector Replacement (3 of 4)

7. Cartridge
9. Injector
13. Injector extraction tool

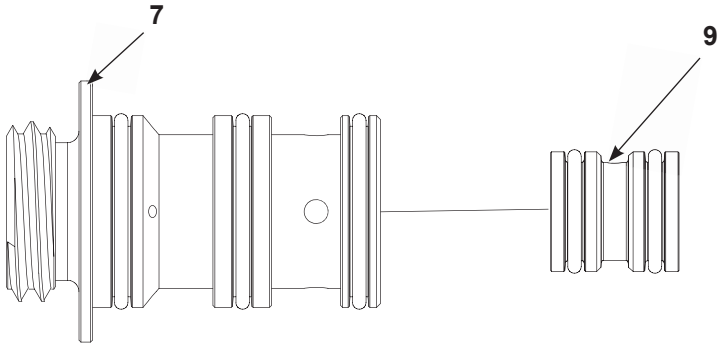

Figure 10 Cartridge and Injector Replacement (4 of 4)

7. Cartridge
9. Injector

© 2026 Nordson Corporation

Upper Pinch Valve Cage Replacement

1. Refer to Figure 10. Remove the cartridge (7). Refer to *Cartridge and Injector Replacement* (above) for additional information.
2. Refer to Figure 6. Remove the upper pinch valve cages (10).
3. Utilize hand pressure to pull the pinch valves (11) from the upper pinch valve cages (10).

CAUTION:

- Inspect the upper pinch valve cages (10) and the pinch valves (11) for wear or damage.
- Replace any worn or damaged parts.

4. Install the upper pinch valve cages (10).

NOTE: Installation of the upper pinch valve cages are in the reverse order of removal.

Lower Pinch Valve Assembly Replacement

1. See Figure 11. Utilizing a 4 mm hex key, remove the screws (6) securing the manifold (5) to the dual inline pump (1).
2. Remove the pinch valves (3).
3. Utilize hand pressure to carefully pull the pinch valves (3) from the lower pinch valve cages (2).

CAUTION:

- Inspect the lower pinch valve cages (2) and the pinch valves (3) for wear or damage.
- Replace any worn or damaged parts.

4. Install the pinch valves (3).

NOTE: Installation of the pinch valves are in the reverse order of removal.

© 2026 Nordson Corporation

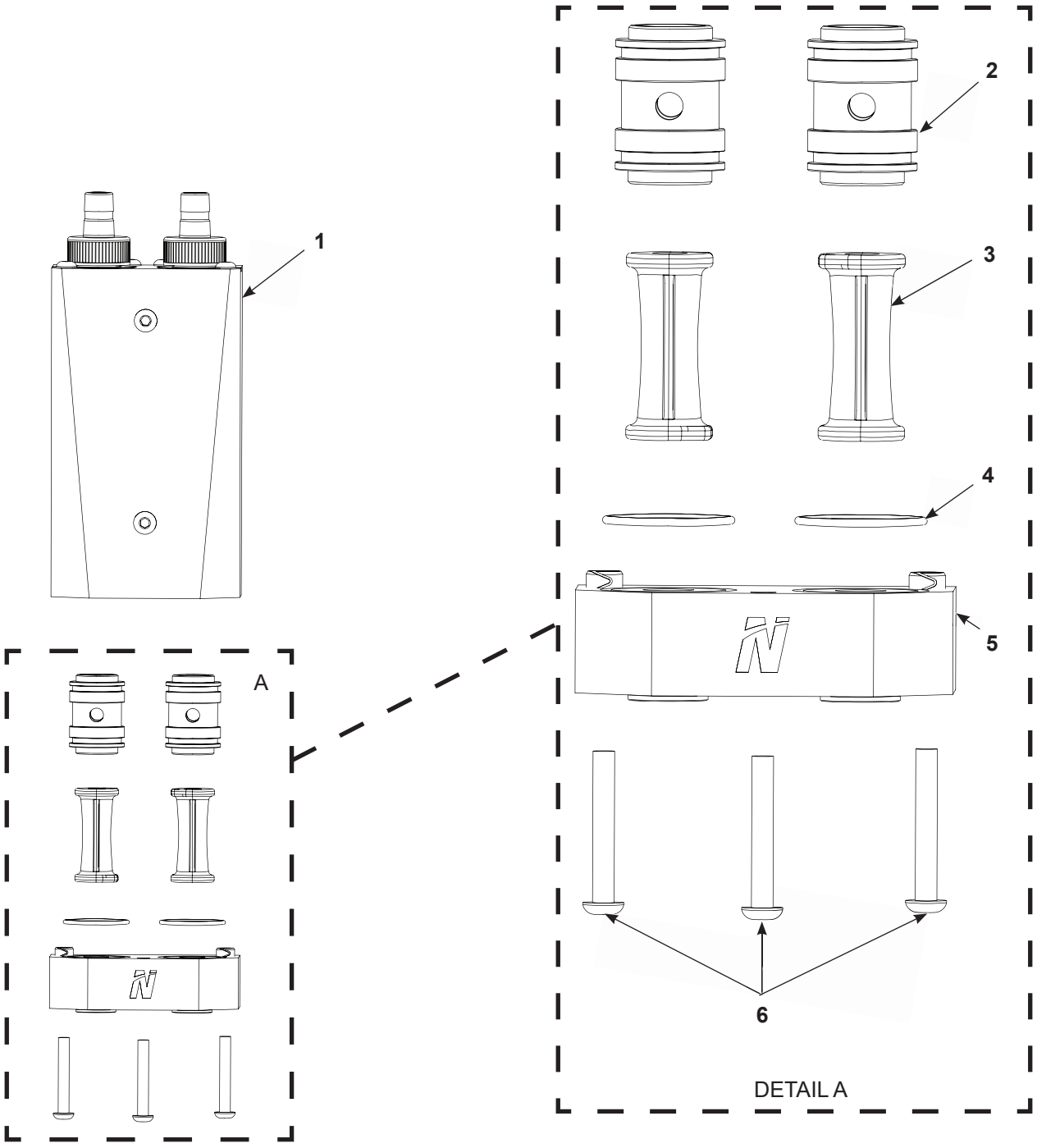

Figure 11 Lower Component Replacement - Dual Inline Pump

1. Dual inline pump
2. Lower pinch valve cage
3. Pinch valve
4. Manifold O-ring (1.062 x 1.188 x 0.062 in.)
5. Manifold
6. Screw

© 2026 Nordson Corporation

Parts

To order parts, call the Nordson Finishing Customer Support Center at (800) 433−9319 or contact your local Nordson representative.

Pump

See Figure 12 and the following parts lists.

Item	Part	Description	Quantity	Note
—	1628079	PUMP ASSY, inline, ENCORE®, dual,pkgd	1	

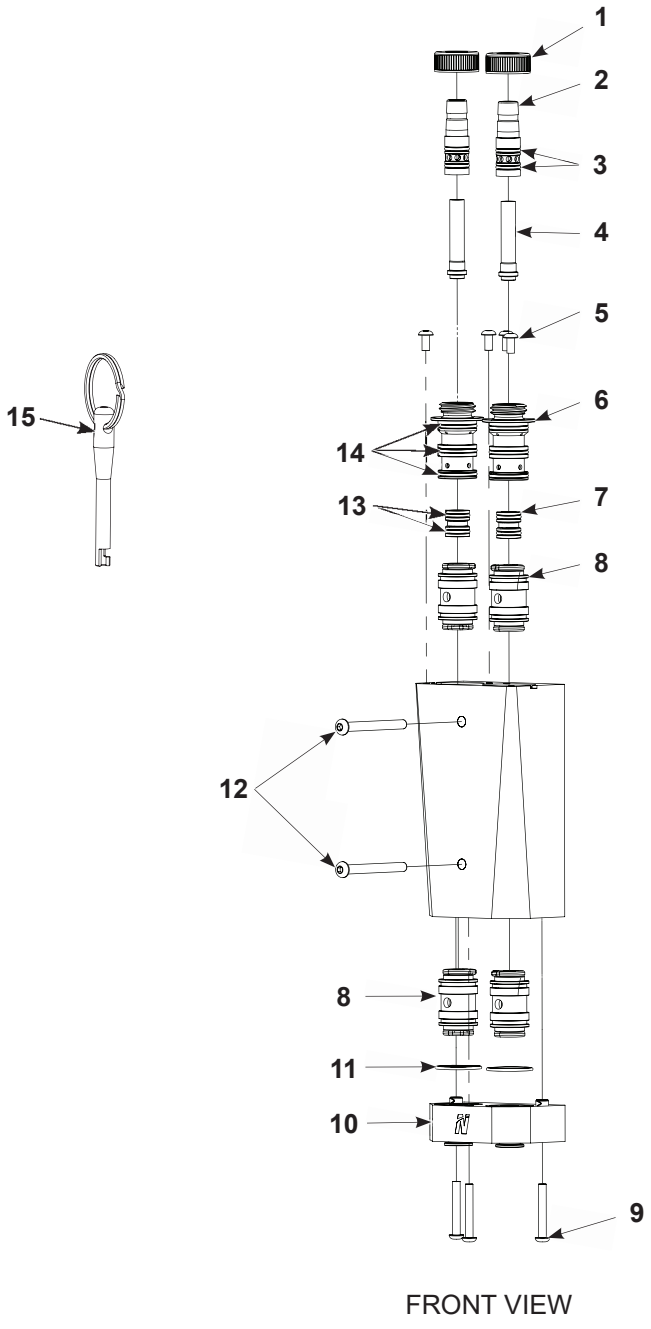

Figure 12 Dual Inline Powder Pump Parts

© 2026 Nordson Corporation

Throat Kits

Refer to Figure 12 and the following parts list.

Item	Part	Description	Quantity	Note
1625719 - KIT, throat holder, VT gun pump			2	
1		• NUT, pump Encore Generation II	1	
2		• HOLDER, pump throat, Encore Generation II	1	
3		• O-RING, 0.500 x 0.625, conductive silicone	2	A
1625721 - KIT, throat, pump, Encore Generation II, Tivar®				
4		• THROAT, pump, Encore Generation II, Tivar	10 Pack	B
1625722 - KIT, throat, pump, Encore Generation II, PTFE				
4		• THROAT, pump, Encore Generation II, PTFE	10 Pack	C

NOTE: A. These O-rings are also available in kit 1628581.

B. Pumps are shipped with Tivar venturi throats.

C. Optional PTFE throats are available for purchase.

Injector Kit

Refer to Figure 12 and the following parts list.

Item	Part	Description	Quantity	Note
1628580 - KIT, cartridge+injector,dual ENCORE pump			2	
13		• O-RING, 0.500 x 0.625 x .063 silicone	2	A
6		• CARTRIDGE, pump, vt, inline	1	
7		• INJECTOR, machined, inline pump, Encore, stainless steel	1	
14		• O-RING, 0.875 x 1.000 x .063 silicone	3	A

NOTE: A. These O-rings are also available in kit 1628581.

Miscellaneous Parts

Refer to Figure 12 and the following parts list.

Item	Part	Description	Quantity	Note
5	UA	SCREW,screw,socket,m5x10,zinc	4	
9	UA	SCREW,button,socket,m5x35,zinc	3	
10	- - - - - -	MANIFOLD	1	
12	UA	SCREW,button,socket,m6x65,zinc	2	
15	1097913	TOOL, extraction, inline pump, Encore	1	

UA: Unavailable for purchase through Nordson. Contact local distributor or local source.

© 2026 Nordson Corporation

O-Ring Kit

Refer to Figure 12 and the following parts list.

Item	Description	Quantity	Note
1628581 - KIT, soft goods,dual Encore pump		1	A
3	• O-RING, 0.500 x 0.625, conductive silicone	4	
8	• VALVE,PINCH,PUMP,ENCORE,HD	4	
11	• O-RING,1.062 x 1.188 x 0.062, silicone	2	
13	• O-RING, 0.500 x 0.625 x .063 silicone	4	
14	• O-RING, 0.875 x 1.000 x .063 silicone	6	
NOTE: A. O-ring kit contains sufficient components to service two pumps.			

Issued 09/26

Original copyright date 2026. Encore, Nordson and the Nordson logo are registered trademarks of Nordson Corporation. Cordis is a trademark of Nordson Corporation.

All other trademarks are the property of their respective owners.

© 2026 Nordson Corporation