Liquid Finishing Systems Equipment Catalog

Part TC–12–03

Issued 1/13

Nordson Corporation welcomes requests for information, comments, and inquiries about its products. General information about Nordson can be found on the Internet using the following address: http://www.nordson.com.

Address all correspondence to:

Nordson Corporation
Attn: Customer Service
555 Jackson Street
Amherst, OH 44001

Notice

This is a Nordson Corporation publication which is protected by copyright. Original copyright date 1994.
No part of this document may be photocopied, reproduced, or translated to another language without the prior written consent of Nordson Corporation. The information contained in this publication is subject to change without notice.

© 2013 All rights reserved.

Trademarks

Cross-Cut, Isocoil, Isocore, Iso-Flo, Kinetix, Nordson, the Nordson logo, OptiMix, PermaFlo, Prism, ScoreGuard, and Watermark are registered trademarks of Nordson Corporation.

Trilogy is a trademark of Nordson Corporation.

Delrin, Kalrez, and Zalak are registered trademarks of E. I. DuPont de Nemours and Company.

Perlast is a trademark of Precision Polymer Engineering Limited.

Viton is a registered trademark of DuPont Dow Elastomers. L.L.C.

All other trademarks are properties of their respective owners.

© 2013 Nordson Corporation

Table of Contents

Ordering Information

Electrostatic Spray Guns ..... Section 1

Non-Electrostatic Spray Guns ..... Section 2

Rotary Atomizers ..... Section 3

Liquid Pumps ..... Section 4

Plural Component Systems ..... Section 5

Dolly Systems ..... Section 6

Filters and Heaters ..... Section 7

Color Changers, Regulators, and Valves ..... Section 8

Hoses and Fittings ..... Section 9

Iso-Flo Waterborne Systems ..... Section 10

Common Accessories ..... Section 11

Continuous Coater ..... Section 12

System Layouts ..... Section 13

Miscellaneous Technical Information ..... Section 14

Index

This technical reference guide contains top level assembly parts designed to assist you in selecting and assembling Nordson liquid equipment systems. For spare parts, kits, and other accessories, please refer to the corresponding product manual. Manuals are available online at http://emanuals.nordson.com. Other technical information, including viscosity conversion charts, fluid delivery and temperature calculations, etc., are also provided to help ensure superior performance and extend the life of every Nordson component.

© 2013 Nordson Corporation
All rights reserved

Table of Contents

© 2013 Nordson Corporation
All rights reserved

Ordering Information

Introduction **1**
How To Order Parts 1
Using the Illustrated Parts List 1
Warranty 2
General Terms and Conditions 3
General 3
Minimum Order Value 3
Terms of Payment 3
Use Only Genuine Nordson Replacement Parts 3
Ordering Assistance 4
Nordson Corporation Customer Service Center — United States . . 4
Parts Orders and Delivery Information 4
Returned Goods Authorization 4
Technical Assistance 4

© 2010 Nordson Corporation
All rights reserved

Table of Contents

© 2010 Nordson Corporation
All rights reserved

Introduction

How To Order Parts

To order parts, call the Nordson Customer Service Center or your local Nordson representative. Use this five-column parts list, and the accompanying illustration, to describe and locate parts.

Using the Illustrated Parts List

Numbers in the Item column correspond to numbers that identify parts in illustrations following each parts list. The code NS (not shown) indicates that a listed part is not illustrated. A dash (—) is used when the part number applies to all parts in the illustration.

The number in the Part column is the Nordson Corporation part number. A series of dashes in this column (– – – – – –) means the part cannot be ordered separately.

The Description column gives the part name, as well as its dimensions and other characteristics when appropriate. Indentions show the relationships between assemblies and subassemblies.

Item	Part	Description	Quantity	Note
—	0000000	Assembly	1	
1	000000	• Subassembly	1	

- If you order the assembly, item 1 will be included.
- If you order item 1, you will receive item 1 only.

The number in the Quantity column is the quantity required per unit, assembly, or subassembly. The code AR (As Required) is used if the part number is a bulk item ordered in quantities or if the quantity per assembly depends on the product version or model.

Letters in the Note column refer to notes at the end of each parts list. Notes contain important information about usage and ordering. Special attention should be given to notes.

Nordson Customer Service and Technical Support Center

United States
Phone: (800) 433-9319
Email: ics.tech.support@nordson.com

Europe
Phone: 00800 7001 7001
Email: Liquid.systems@nordson.com

© 2013 Nordson Corporation
All rights reserved

Introduction

Warranty

A. Nordson warrants Nordson-supplied equipment (“Equipment”) to be free from defects in material and workmanship provided the Equipment is used and maintained in accordance with Nordson’s instructions. The base warranty period is (i) one year from first use; (ii) 18 months from shipment; or (iii) 2000 hours of use, whichever occurs first. NORMAL WEAR ITEMS ARE NOT INCLUDED IN THIS WARRANTY.

B. In the event of non-compliance with this warranty, Nordson shall at its option modify, adjust, repair or replace the Equipment. Return shipping charges will be absorbed by Nordson at Nordson’s option.

C. Nordson assumes no responsibility for the quality of performance of coatings or other materials used with the Equipment.

D. The above warranty does not extend to Equipment damaged after date of shipment from Nordson’s plant where the damage is not directly due to a defect in material or workmanship, nor does is apply to Equipment altered or repaired in an unauthorized manner.

E. Using non-Nordson or non-approved replacement parts will void any Factory Mutual approvals obtained for Nordson Finishing Equipment, can be detrimental to safe and proper operation of the Equipment, and will void this warranty.

F. The sole liability of Nordson and the exclusive remedy of the Buyer arising out of the performance of services or supply or use of the Equipment whether arising under contract, tort (including negligence), strict liability or otherwise shall be the modification, adjustment, repair or replacement of the Equipment, reperformance of services or refund of the purchase price.

G. NORDSON AND BUYER AGREE THAT IN CONSIDERATION OF THE ABOVE EXPRESS WARRANTY AND ANY PERFORMANCE GUARANTEE(S) SPECIFICALLY SET FORTH IN THE PROPOSAL, ALL OTHER WARRANTIES AND GUARANTEES, OTHER THAN TITLE, EITHER EXPRESSED OR IMPLIED, INCLUDING WARRANTIES OR MERCHANTABILITY AND FITNESS FOR A PARTICULAR PURPOSE, ARE EXCLUDED FROM THE CONTRACT.

© 2013 Nordson Corporation
All rights reserved

Introduction

General Terms and Conditions

General

- The possession of the Nordson *Liquid Finishing Systems Equipment Catalog* does not authorize the purchase for resale of Nordson equipment or parts listed herein.
- Nordson Corporation reserves the right to distribute its parts only through authorized distributors qualified to resell the particular equipment or parts.
- Orders are accepted with the understanding that Nordson's obligation to ship is subjected to the availability of the components.

The Nordson *Liquid Finishing Systems Equipment Catalog* does not contain all parts available for sale. Refer to the appropriate product manual for parts not listed in this ordering book. Manuals are available online at http://emanuals.nordson.com.

Use Only Genuine Nordson Replacement Parts

Nordson liquid coating equipment and systems are designed, and approved, for use with genuine Nordson replacement parts. The use of non-Nordson, non-approved parts may degrade equipment performance and cause accelerated wear, will void any Factory Mutual approvals and possibly affect coverage by your insurance carrier, and will void the product warranty.

Beware of parts manufacturers falsely representing themselves as Nordson agents or distributors. Insist on genuine Nordson replacement parts available only from Nordson Corporation or authorized distributors.

© 2013 Nordson Corporation
All rights reserved

Introduction

Ordering Assistance

Nordson Corporation Customer Service Center — United States

For more information contact your local Nordson representative or call the Nordson Customer Service Center in Amherst, Ohio, at 800-433-9319, at 440-985-4022.

Nordson Corporation Customer Service Center — Europe

For more information call your Nordson Customer Service in Europe at 00800 7001 7001.

Parts Orders and Delivery Information

Your Customer Service Center representative places orders and expedites shipments.

Returned Goods Authorization

Your Customer Service Center representative provides return authorization and other instructions for returning equipment for warranty evaluation or for returning goods incorrectly ordered or shipped.

Technical Assistance

Technical Service Representatives are just a phone call away — ready to assist you with your technical questions. Simply call 800-433–9319.

© 2013 Nordson Corporation
All rights reserved

Section 1
Electrostatic Spray Guns

Trilogy™ Waterborne Guns 1-1
Description 1-1
Spray Technology 1-1
Features 1-1
Specifications 1-2
Ordering Information 1-3
Waterborne Spray Guns and Kits 1-3
Electrostatic Cables 1-3
Fluid and Air Hoses and Fittings for Manual Gun 1-3
Optional Quick-Exhaust Valve for Automatic Gun 1-4
Tubing and Accessories for Automatic Gun 1-4

Trilogy Solventborne Guns 1-5
Description 1-5
Spray Technology 1-5
Features 1-5
Specifications 1-6
Ordering Information 1-7
Solventborne Spray Guns and Kits 1-7
Cables for Manual Gun 1-7
Fluid and Air Hoses and Fittings for Manual Gun 1-8
Optional Quick-Exhaust Valve for Automatic Gun 1-8
Tubing and Accessories for Automatic Gun 1-8

© 2013 Nordson Corporation
All rights reserved

Table of Contents

Kinetix Spray Systems 1-9
Description 1-9
Features 1-9

Kinetix Electrostatic Spray Guns 1-10
Available Models 1-10
Specifications 1-11
Manual Spray Guns: Airless, and Air-Assisted Airless 1-11
Automatic Spray Guns: Airless, and Air-Assisted Airless 1-12
Kinetix Manual Air-Assisted Airless (AAA) Spray Gun 1-13
Kinetix Manual Airless Electrostatic Spray Gun 1-14

Kinetix Spray Gun Packages (Configured) 1-15
Kinetix Automatic Air-Assisted Airless (AAA) Spray Gun 1-15
Kinetix Automatic Airless Electrostatic Spray Gun 1-16

© 2013 Nordson Corporation
All rights reserved

Kinetix Accessories 1-17
Description 1-17
KVLP Fluid Tips 1-17
KVLP Fluid Tip Selection Guide 1-17
KVLP Air Caps (Production and Compliance) 1-18
KVLP Air Cap Selection Guide 1-18
KVLP Air Cap Application Key 1-19
KVLP Air Cap Selection Table 1-20
Air Spray Fluid Tips 1-21
Air Spray Fluid Tip Selection Guide 1-21
Conical Air Spray Nozzles 1-21
Conical Air Spray Nozzle Selection Guide 1-21
Air Spray Air Caps 1-22
Air Spray Air Cap Selection Guide 1-22
Isocoil® Assembly 1-23
Ordering Information 1-23
Current Draw 1-24
Hose and Tubing Options 1-24
Cross-Cut Nozzle Selection Guide 1-25
Dome Nozzle Selection Guide 1-28
Repair Kits 1-31
Power Supplies and Options 1-32
Manual Air Spray, KVLP, AAA, and Watermark Air Hoses 1-32
Fluid Hoses and Accessories for Manual Spray Guns (Kit Part Numbers) 1-32
Fluid Hoses and Accessories for Automatic Spray Guns (Kit Part Numbers) 1-33
Air Tubing Option for Automatic Low-Pressure Spray Gun 1-33

Air Caps and Fluid Tips 1-35

© 2013 Nordson Corporation
All rights reserved

Table of Contents

© 2013 Nordson Corporation
All rights reserved

Trilogy™ Waterborne Guns

Description

The Trilogy manual electrostatic air spray/HVLP waterborne spray gun is designed to apply waterborne coating materials. It is used with the Nordson Iso-Flo system, which electrostatically charges waterborne coatings and delivers them to the spray gun while electrically isolating the charged coating from the coating supply. The electrostatic voltage is provided by a separate EPS-6 electrostatic power supply.

HVLP and air spray systems use low-pressure fluid sources, such as pressure pots, diaphragm pumps, or low-ratio piston pumps. They are commonly used to apply low to medium viscosity fluids to products requiring a high-quality finish.

Spray Technology

The fluid tip and air cap you choose to use determines the spray gun technology: HVLP or air spray.

HVLP technology creates a soft spray with high transfer efficiency, reducing emissions of volatile organic compounds (VOCs). HVLP spray guns use high volumes of very low pressure pattern control (horn) and atomizing air (less than 0.69 bar (10 psi)). The high volume of pattern control air provides sufficient energy to shape the pattern of sprayed fluids. The low atomizing air pressure reduces fluid bounceback and overspray, which improves transfer efficiency.

HVLP atomization is typically coarser than air spray when used with high-viscosity fluids and high flow rates.

Air spray technology atomizes material at higher air pressures and lower air flows than HVLP spray guns. Air spray guns produce a very fine, atomized mist. This makes them useful for extremely fine finishing work.

Features

- adjustable fluid flow rate
- adjustable horn air pressure (manual gun)
- large air passages for higher air energy
- separate horn and atomizing air for the superior spray control (automatic gun)
- bellows-type packing cartridge
- 25 ft, $^1/_4$-in. ID fluid hose (manual gun)



Manual Spray Gun

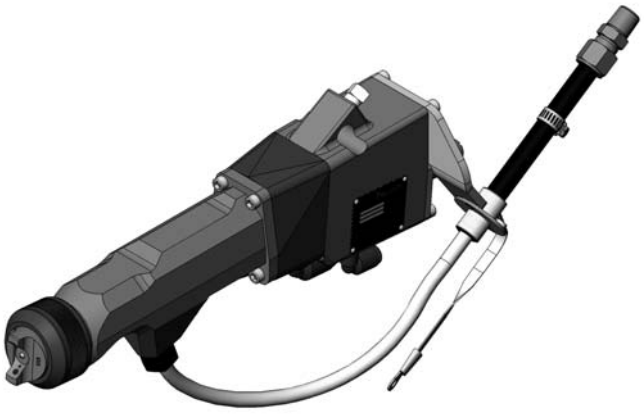

Automatic Spray Gun

© 2013 Nordson Corporation
All rights reserved

Trilogy Waterborne Guns

Specifications

	Manual Spray Gun	Automatic Spray Gun
Dimensions, cm (in.)		
Length	30.48 (12.00)	35.4 (13.92)
Height	22.28 (8.77)	12.29 (4.84)
Width	5.58 (2.20)	7.92 (3.12)
Weight, g (oz)	711(25.1)	1143(40.3)
Operating Pressures, bar (psi)		
Air:		
Maximum input pressure	6.9 (100)	6.9 (100)
Fluid:		
Maximum input pressure	6.9 (100)	6.9 (100)
Maximum Fluid Temperature	82 °C (180 °F)	82 °C (180 °F)
Air Hose		
Length, m (ft):	9.14 (30) 15.24 (50) 30.48 (100)	
Available ID, mm (in.)	9.25 ($^3/_8$)	—
Fittings	$^1/_4$-in. NPS, female	—
Fluid Hose		
Length, m (ft):	7.62 (25)	
Available ID, mm (in.)	6.35 ($^1/_4$)	—
Fittings	$^1/_4$-in. NPS, female	—
Air Tubing		
Length (optimum for HVLP) m (ft):	—	7.62 (25)
Minimum ID required for HVLP (horn and atomizing) mm (in)	—	8 ($^5/_{16}$)
Spray Gun Fittings		
Air:	$^1/_4$-in. NPS, male	
Atomization	—	$^3/_8$-in. tubing
Horn	—	$^3/_8$-in. tubing
Trigger	—	$^1/_4$-in. tubing
Fluid fitting:	$^3/_8$-in. NPS, male	Hose Nut: $^5/_8$–20 UN 2A threads, $^3/_8$-in. tubing Ferrule set: $^3/_8$-in. tubing
Electrostatics		
Maximum Voltage (kV):	60	93
Maximum output rating current (microamps):	150	122

© 2013 Nordson Corporation
All rights reserved

Trilogy Waterborne Guns

Ordering Information

Waterborne Spray Guns and Kits

Part	Description	Note
	Trilogy Waterborne Electrostatic Air Spray HVLP Spray Guns	
1091981	Manual spray gun, low pressure, waterborne	
1090981	Automatic spray gun, low pressure, waterborne	
	Power Supplies	
229934	Power Supply, EPS6, 120/240	
229941	Power Supply, EPS6, 100/200	
	Kits	
1094775	Ferrule, $^3/_8$-in., low pressure	
1094777	Cartridge	
336634	Air seal, hot paint, electrostatic (manual)	
336656	Air seal (automatic)	
1094727	Low pressure hose, 25 ft (manual)	
1094725	Low pressure hose, 25 ft (automatic)	
325657	Air valve (manual)	
336631	Trigger lock, electrostatic (manual)	
1094724	Watermark extension (automatic)	
325529	Muffler/exhaust valve (automatic)	

Electrostatic Cables

Part	Description	Note
297979	Cable, HD, electrostatic, 2 m	
297980	Cable, HD, electrostatic, 8 m	

Fluid and Air Hoses and Fittings for Manual Gun

Part	Description	Note
1074130	Hose, air, with $^1/_4$-in. NPSF fittings, 30 ft, packaged	
1074131	Hose, air, with $^1/_4$-in. NPSF fittings, 50 ft, packaged	
1074132	Hose, air, with $^1/_4$-in. NPSF fittings, 100 ft, packaged	
336470	Coupling, $^3/_8$-in. NPSM, brass	
972637	Coupling, $^3/_8$-in. NPSM, brass, nickel plate	
336497	Stem, swivel, $^3/_8$-in. NPS, Hosco	
336495	Connector, quick disconnect, $^3/_8$-in. NPS, Hosco	
336496	Connector, circulation, $^3/_8$-in. NPS, PLH–RY–6, stainless steel	A
NOTE A:Use to circulate fluid at the gun handle.		

© 2013 Nordson Corporation
All rights reserved

Trilogy Waterborne Guns

Optional Quick-Exhaust Valve for Automatic Gun

Part	Description	Note
325529	Muffler/exhaust valve kit	

Tubing and Accessories for Automatic Gun

Part	Description	Note
900509	Air tubing, polyethylene, 0.25-in. OD x 0.04-in. wall	A
900511	Air tubing, polyethylene, 0.375-in. OD x 0.062-in. wall	A
900556	Air tubing, nylon, 0.25-in. OD x 0.035-in. wall	A
900557	Air tubing, nylon, 0.375-in. OD x 0.05-in. wall	A
NOTE A:Order in increments of one foot		

© 2013 Nordson Corporation
All rights reserved

Trilogy Solventborne Guns

Description

The Trilogy electrostatic air spray/HVLP solventborne spray gun is designed for use with solventborne coating materials. It has an internal user-replaceable voltage multiplier that generates the high voltage used to electrostatically charge the coating materials as they are sprayed from the gun. Electrostatic output voltage and air pressure are controlled by an IPS-20 control unit.

HVLP and air spray systems use low-pressure fluid sources, such as pressure pots, diaphragm pumps, or low-ratio piston pumps. They are commonly used to apply low to medium viscosity fluids to products requiring a high-quality finish.



Manual Spray Gun

Spray Technology

The fluid tip and air cap you choose to use determines the spray gun technology: HVLP or air spray.

HVLP technology creates a soft spray with high transfer efficiency, reducing emissions of volatile organic compounds (VOCs). HVLP spray guns use high volumes of very low pressure pattern control (horn) and atomizing air (less than 0.69 bar (10 psi)). The high volume of pattern control air provides sufficient energy to shape the pattern of sprayed fluids. The low atomizing air pressure reduces fluid bounceback and overspray, which improves transfer efficiency.

HVLP atomization is typically coarser than air spray when used with high-viscosity fluids and high flow rates.

Air spray technology atomizes material at higher air pressures and lower air flows than HVLP spray guns. Air spray guns produce a very fine, atomized mist. This makes them useful for extremely fine finishing work.

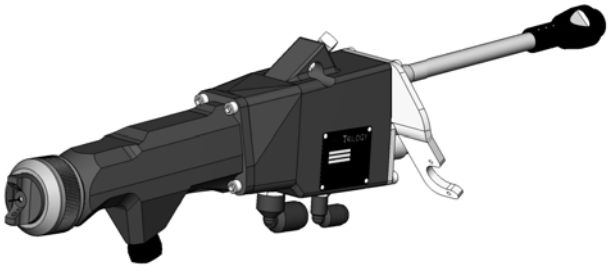

Automatic Spray Gun

Features

- Adjustable fluid flow rate
- Adjustable horn and air pressure (manual gun)
- Large air passages for higher air energy
- User-replaceable voltage multiplier
- Bellows-type packing cartridge

© 2013 Nordson Corporation
All rights reserved

Trilogy Solventborne Guns

Specifications

	Manual Spray Gun	Automatic Spray Gun
Dimensions, cm (in.)		
Length	30.48 (12.00)	35.4 (13.92)
Height	22.28 (8.77)	12.29 (4.84)
Width	5.58 (2.20)	7.92 (3.12)
Weight, g (oz)	887(31.3)	1469 (51.8)
Operating Pressures, bar (psi)		
Air:		
Maximum input pressure	6.9 (100)	6.9 (100)
Fluid:		
Maximum input pressure	6.9 (100)	6.9 (100)
Maximum Fluid Temperature	82 °C (180 °F)	82 °C (180 °F)
Air Hose		
Length, m (ft):	9.14 (30) 15.24 (50) 30.48 (100)	—
Available ID, mm (in.)	9.25 ($^3/_8$)	—
Fittings	$^1/_4$-in. NPS, female	—
Air Tubing		
Length (optimum for HVLP) m (ft):	—	7.62 (25)
Minimum ID required for HVLP (horn and atomizing) mm (in)	—	8 ($^5/_{16}$)
Spray Gun Fittings		
Air:	$^1/_4$-in. NPS, male	
Atomization	—	$^3/_8$-in. tubing
Horn	—	$^3/_8$-in. tubing
Trigger	—	$^1/_4$-in. tubing
Fluid fitting:	$^3/_8$-in. NPS, male	Hose Nut: $^5/_8$–20 UN 2A threads, $^3/_8$-in. tubing Ferrule set: $^3/_8$-in. tubing
Electrostatics		
Maximum Voltage (kV):	93	93
Maximum output rating current (microamps):	122	122

© 2013 Nordson Corporation
All rights reserved

Trilogy Solventborne Guns

Ordering Information

Solventborne Spray Guns and Kits

Part	Description	Note
	Trilogy Solventborne Electrostatic Air Spray HVLP Spray Guns	
1090697	Manual spray gun, low pressure, solventborne	A
1090428	Automatic spray gun, low pressure, solventborne	B
	Power Supplies	
1083263	Controller, manual, IPS-20	A
1083504	Controller, automatic, IPS-20	B
	Kits with Gun and Power Supply	
1603809	Kit, Trilogy manual gun with controller	
1603810	Kit, Trilogy automatic gun with controller	
	Kits	
1094775	Ferrule, $^3/_8$-in., low pressure	
1094777	Cartridge	
1094722	Needle	
336505	Multiplier, 93 kV	
336634	Air seal, hot paint, electrostatic (manual)	
336656	Air seal (automatic)	
325657	Air valve (manual)	
336631	Trigger lock, electrostatic (manual)	
1045985	Fluid hose collar	
1045983	Cordset (automatic)	
1046521	Cordset with 50 ft cable (automatic)	

NOTE A:Included in Kit 1603809.
B: Included in Kit 1603810.

Cables for Manual Gun

Part	Description	Note
1095680	Cable, 50 ft, manual, 5 conductor	
336531	Cable, 50 ft, electrostatic, extension	

© 2013 Nordson Corporation
All rights reserved

Trilogy Waterborne Guns

Fluid and Air Hoses and Fittings for Manual Gun

Part	Description	Note
1092093	Hose, low pressure, 25 ft, standard	
1092092	Hose, low pressure, 25 ft, solvent resistant	
1074130	Hose, air, with $^1/_4$-in. NPSF fittings, 30 ft, packaged	
1074131	Hose, air, with $^1/_4$-in. NPSF fittings, 50 ft, packaged	
1074132	Hose, air, with $^1/_4$-in. NPSF fittings, 100 ft, packaged	
336470	Coupling, $^3/_8$-in. NPSM, brass	
972637	Coupling, $^3/_8$-in. NPSM, brass, nickel plate	
336497	Stem, swivel, $^3/_8$-in. NPS, Hosco	
336495	Connector, quick disconnect, $^3/_8$-in. NPS, Hosco	
336496	Connector, circulation, $^3/_8$-in. NPS, PLH–RY–6, stainless steel	A
NOTE A:Use to circulate fluid at the gun handle.		

Optional Quick-Exhaust Valve for Automatic Gun

Part	Description	Note
325529	Muffler/exhaust valve kit	

Tubing and Accessories for Automatic Gun

Part	Description	Note
900509	Air tubing, polyethylene, 0.25-in. OD x 0.04-in. wall	A
900511	Air tubing, polyethylene, 0.375-in. OD x 0.062-in. wall	A
900556	Air tubing, nylon, 0.25-in. OD x 0.035-in. wall	A
900557	Air tubing, nylon, 0.375-in. OD x 0.05-in. wall	A
900561	Fluid tubing, PTFE, 0.375-in. OD x 0.188-in. ID	A
146132	Fluid tubing, PTFE, 0.375-in. OD x 0.25-in. ID	A
NOTE A:Order in increments of one foot		

© 2013 Nordson Corporation
All rights reserved

Kinetix Spray Systems

Description

Nordson Kinetix spray systems are designed to deliver superior application performance with a variety of substrates, coatings, and part profiles. The complete line of advanced Kinetix electrostatic spray systems feature air spray, airless spray, air-assisted airless and HVLP technologies for both automatic and manual applications. Kinetix technology optimizes the key mechanics of spraying — including electrostatic power, air energy, fluid pressure, and dynamic motion. The synergy of these elements created by Kinetix delivers results: superior transfer efficiency; increased capacity with less scrap and rework costs; and improved operator comfort in manual applications for reduced material waste and improved finish quality.



Dynamic Motion



Electrostatic Power



Air Energy



Fluid Pressure

Features

- 93 kV at the gun tip — the highest in the industry
- Automatic current limiting to customize electrostatics to specific part profiles
- Extreme fan pattern control
- Strong electrostatic load line
- Lightweight, balanced, handle-forward design
- Easy access to precise controls
- Anti-wrap-back feature reduces operator exposure to VOCs and overspray
- Over 60 fluid tip and air cap combinations
- Gun bodies constructed of super-tough carbon-filled polyamide materials for long life
- Carbide ball-and-seat combinations and durable PEEK materials for air caps and fluid tips
- Tough, single-piece multipliers positioned in gun and contain no fragile moving parts
- Self-adjusting packing cartridges
- Uses Nordson Cross-Cut nozzles

© 2013 Nordson Corporation
All rights reserved

Kinetix Electrostatic Spray Guns

Available Models

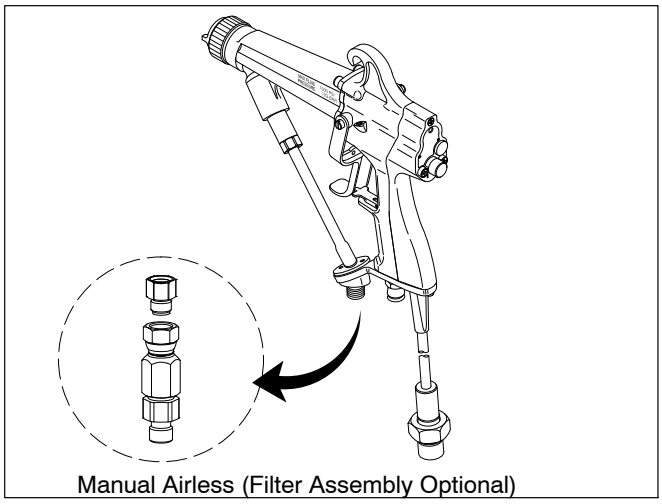

Manual Airless (Filter Assembly Optional)

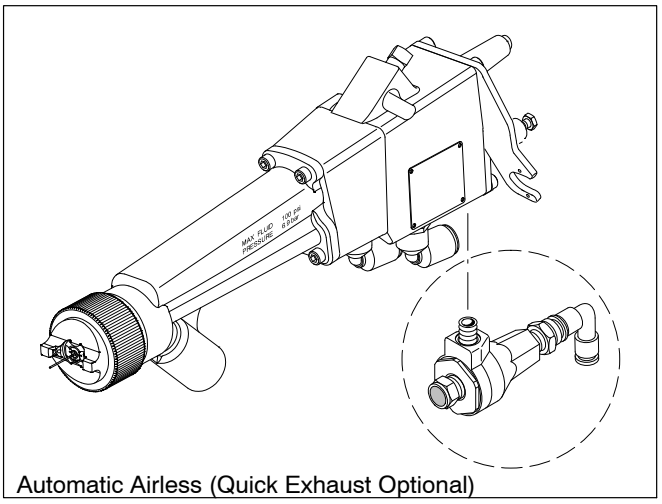

Automatic Airless (Quick Exhaust Optional)

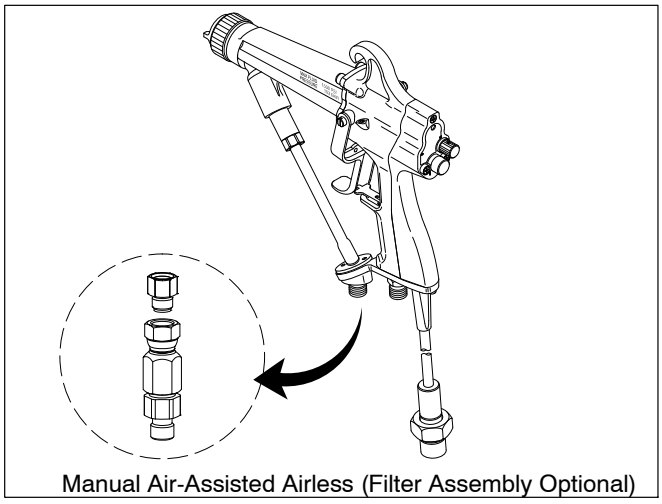

Manual Air-Assisted Airless (Filter Assembly Optional)

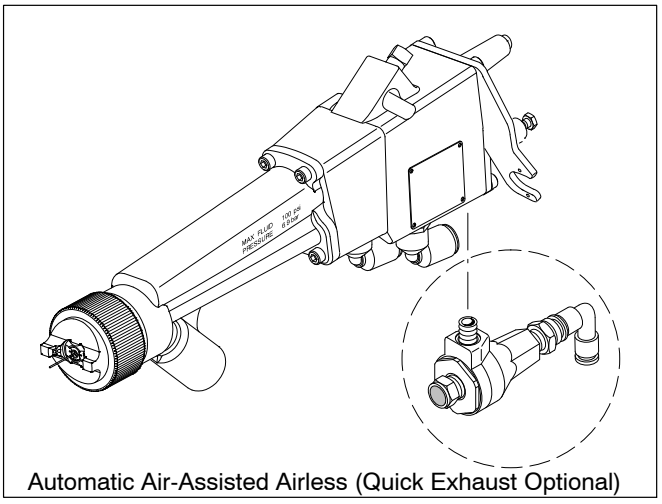

Automatic Air-Assisted Airless (Quick Exhaust Optional)

© 2013 Nordson Corporation
All rights reserved

Kinetix Electrostatic Spray Guns

Specifications

Manual Spray Guns: Airless, and Air-Assisted Airless

	Airless	Air-Assisted Airless
Dimensions, cm (in.)		
Length	30.48 (12.00)	30.48 (12.00)
Height	22.28 (8.77)	22.28 (8.77)
Width	5.58 (2.20)	5.58 (2.20)
Weight, g (oz)	837 (29.5)	837 (29.5)
Operating Pressures, bar (psi)		
Air:		
Maximum input pressure	6.9 (100)	6.9 (100)
Fluid:		
Maximum input pressure	103 (1500)	103 (1500)
Maximum fluid temperature	82 °C (180 °F)	82 °C (180 °F)
Air Hose		
Length, m (ft):	As Required	7.62 (25), ($^5/_{16}$ only) 9.144 (30) 15.24 (50) 30.48 (100)
Available ID, cm (in.)	— — $^1/_4$-in. tube —	7.94 ($^5/_{16}$), (25 ft only) 9.53 ($^3/_8$) — NOTE: Use any grounding-type hose appropriate for your application needs.
Fittings		
Air:	$^1/_4$-in. tube	$^1/_4$-in. NPSM, male
Fluid fitting:		
Standard	$^1/_2$-20 JIC, male	$^1/_2$-20 JIC, male
Standard w/quick disconnect	—	—

© 2013 Nordson Corporation
All rights reserved

Kinetix Electrostatic Spray Guns

Automatic Spray Guns: Airless, and Air-Assisted Airless

	Airless	Air-Assisted Airless
Dimensions, cm (in.)		
Length	35.4 (13.92)	35.4 (13.92)
Height	12.29 (4.84)	12.29 (4.84)
Width	7.92 (3.12)	7.92 (3.12)
Weight, g (oz)	1465 (51.6)	1465 (51.6)
Operating Pressures, bar (psi)		
Air:		
Maximum input pressure	6.9 (100)	6.9 (100)
Fluid:		
Maximum input pressure	103 (1500)	103 (1500)
Maximum fluid temperature	82 °C (180 °F)	82 °C (180 °F)
Air Tubing		
Length:	As Required	As Required
NOTE: For optimum KVLP performance, atomizing and horn air tubing should be less than 25 ft.		
OD (in.):		
Atomization	—	$^3/_8$
Horn	—	—
Trigger	$^1/_4$	$^1/_4$
Fittings		
Air:		
Trigger	$^1/_4$-in. tube	$^1/_4$-in. tube
Atomization	—	$^3/_8$-in. tube
Horn	—	—
Fluid fitting:		
Standard	$^1/_2$-20 JIC, male	$^1/_2$-20 JIC, male
	—	—
Optional	—	—

© 2013 Nordson Corporation
All rights reserved

Kinetix Spray Gun Packages (Configured)

Kinetix Manual Air-Assisted Airless (AAA) Spray Gun

1. Kinetix Manual AAA Spray Gun Package

These part numbers include the gun, cable, 1 ft high-pressure grounded fluid hose, an AAA air cap, and an AAA fluid tip. There is an additional $225 charge for the 100-ft cable/gun version.

Kinetix Manual AAA Gun, Cable, Fluid Hose	**50-ft Cable**	
Gun, cable, fluid hose, air cap, fluid tip	336716	Gun/Cable #_____

Manual Gun Power Supply Unit

Controller, manual, IPS-20 — Power Unit # **1083263**

---

2. Nozzle

For a list of nozzle choices, refer to *Kinetix Accessories* in this book, or the *Nordson Airless Nozzle Catalog*, section B10 for Cross-Cut nozzles, and section C2 for dome nozzles.

Nozzle #_____

---

3. Restrictor or Gasket and Retaining Washers

Choose one of the following combinations:

- Nozzle w/restrictor and gasket retaining washer
- Nozzle w/gasket and gasket retaining washer
- Nozzle w/PTFE retaining O-ring

Restrictors	.010	123050
	.012	123051
	.015	123052
	.018	123053
	.020	123054
	.025	123055
	.032	123056
	.040	123057

Gasket

122481 (package of 10)

Gasket Retaining Washer

336675 (package of 12)

PTFE Retaining O-ring (do not use with gasket or restrictors)

940076

Restrictor #_____

Gasket #_____

Gasket Retaining Washer #_____

PTFE Retaining O-ring #_____

---

4. Electrode

An electrode comes separate from the nozzle and is inserted through the nozzle as illustrated in sections B10 and C2 of the *Nordson Airless Nozzle Catalog*.

Electrode # **336384**

© 2013 Nordson Corporation
All rights reserved

Kinetix Spray Gun Packages (Configured)

Kinetix Manual Airless Electrostatic Spray Gun

1. Kinetix Manual Airless Electrostatic Gun Package
These part numbers include the gun, cable, 1 ft high-pressure hose, an airless electrostatic air cap, and a high-pressure fluid tip. There is an additional $225 charge for the 100-ft cable/gun version.

Kinetix Manual Airless Gun, Cable, Electrostatic Fluid Hose	**50-ft Cable**	
Gun, cable, hose, air cap, fluid tip	336717	Gun/Cable #_____

Manual Gun Power Supply Unit
Controller, manual, IPS-20 — Power Unit # 1083263

---

2. Nozzle

For a list of nozzle choices, refer to *Kinetix Accessories* in this book, or the *Nordson Airless Nozzle Catalog*, section B10 for Cross-Cut nozzles, and section C2 for dome nozzles.

Nozzle #_____

---

3. Restrictor or Gasket and Retaining Washers

Choose one of the following combinations:

- Nozzle w/restrictor and gasket retaining washer
- Nozzle w/gasket and gasket retaining washer
- Nozzle w/PTFE retaining O-ring

Restrictors	.010	123050
	.012	123051
	.015	123052
	.018	123053
	.020	123054
	.025	123055
	.032	123056
	.040	123057

Gasket
122481 (package of 10)

Gasket Retaining Washer
336675 (package of 12)

PTFE Retaining O-ring (do not use with gasket or restrictors)
940076

Restrictor #_____
Gasket #_____
Gasket Retaining Washer #_____
PTFE Retaining O-ring #_____

---

4. Electrode

An electrode comes separate from the nozzle and is inserted through the nozzle as illustrated in sections B10 and C2 of the *Nordson Airless Nozzle Catalog*.

Electrode # **336384**

© 2013 Nordson Corporation
All rights reserved

Kinetix Spray Gun Packages (Configured)

Kinetix Automatic Air-Assisted Airless (AAA) Spray Gun

1. Kinetix Automatic AAA Spray Gun Package
This part number includes the gun, 50-ft cable, an AAA air cap, and a 1.5 ft Isocore high-pressure fluid hose.

Kinetix Automatic AAA Spray Gun, Cable, Fluid Hose
Gun, cable, air cap, fluid hose — Gun/Cable # **336682**

Automatic Gun Power Supply Unit
Controller, automatic, IPS-20 — Power Unit # **1083504**

---

2. Nozzle

For a list of nozzle choices, refer to *Kinetix Accessories* in this book, or the *Nordson Airless Nozzle Catalog*, section B10 for Cross-Cut nozzles, and section C2 for dome nozzles.

Nozzle #_____

---

3. Restrictor or Gasket and Retaining Washers

Choose one of the following combinations:

- Nozzle w/restrictor and gasket retaining washer
- Nozzle w/gasket and gasket retaining washer
- Nozzle w/PTFE retaining O-ring

Restrictors	.010	123050
	.012	123051
	.015	123052
	.018	123053
	.020	123054
	.025	123055
	.032	123056
	.040	123057

Gasket
122481 (package of 10)

Gasket Retaining Washer
336675 (package of 12)

PTFE Retaining O-ring (do not use with gasket or restrictors)
940076

Restrictor #_____
Gasket #_____
Gasket Retaining Washer #_____
PTFE Retaining O-ring #_____

---

4. Electrode

An electrode comes separate from the nozzle and is inserted through the nozzle as illustrated in sections B10 and C2 of the *Nordson Airless Nozzle Catalog*.

Electrode # **336384**

© 2013 Nordson Corporation
All rights reserved

Kinetix Spray Gun Packages (Configured)

Kinetix Automatic Airless Electrostatic Spray Gun

1. Kinetix Automatic Airless Electrostatic Spray Gun Package
This part number includes the gun, 50-ft cable, 1.5 ft high-pressure electrostatic hose, an airless electrostatic air cap, and a high-pressure fluid tip.

Kinetix Airless Spray Gun, Cable, Electrostatic Hose
Gun, cable, hose, air cap, fluid tip — Gun/Cable # **336683**

Automatic Gun Power Supply Unit
Controller, automatic, IPS-20 — Power Unit # **1083504**

---

2. Nozzle

For a list of nozzle choices, refer to *Kinetix Accessories* in this book, or the *Nordson Airless Nozzle Catalog*, section B10 for Cross-Cut nozzles, and section C2 for dome nozzles.

Nozzle #_____

---

3. Restrictor or Gasket and Retaining Washers

Choose one of the following combinations:

- Nozzle w/restrictor and gasket retaining washer
- Nozzle w/gasket and gasket retaining washer
- Nozzle w/PTFE retaining O-ring

Restrictors	.010	123050
	.012	123051
	.015	123052
	.018	123053
	.020	123054
	.025	123055
	.032	123056
	.040	123057

Gasket
122481 (package of 10)

Gasket Retaining Washer
336675 (package of 12)

PTFE Retaining O-ring (do not use with gasket or restrictors)
940076

Restrictor #_____

Gasket #_____

Gasket Retaining Washer #_____

PTFE Retaining O-ring #_____

---

4. Electrode

An electrode comes separate from the nozzle and is inserted through the nozzle as illustrated in sections B10 and C2 of the *Nordson Airless Nozzle Catalog*.

Electrode # **336384**

© 2013 Nordson Corporation
All rights reserved

Kinetix Accessories

Description

The following is ordering information for Kinetix options and accessories. Do not mix KVLP and air spray parts. KVLP fluid tips require KVLP air caps. Air Spray fluid tips require air spray air caps.

KVLP Fluid Tips

KVLP Fluid Tip Selection Guide

- Understand flow rate required for application. Flow rate is a function of film build, pattern width, line speed, coating material solids, and spray gun travel speed.
- After making your initial tip ID choice, Nordson recommends having the next size lower and higher on hand as well.
- Flow rate gun using coating material.
- Make sure that un-atomized fluid stream breaks between 10 and 14 inches. Adjust fluid tip ID to get correct flow rate and fluid stream break instead of increasing or decreasing fluid pressure.

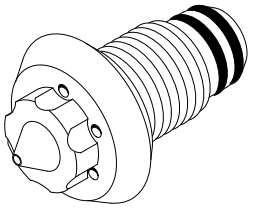

KVLP Fluid Tip

Part	Description
336573	.030
336574	.035
336575	.040
336576	.050
336577	.060
336578	.070
336579	.080
NOTE: All fluid tips come standard with Perlast O-rings. Spare fluid tip O-ring, part 336678.	

© 2013 Nordson Corporation
All rights reserved

Kinetix Accessories

KVLP Air Caps (Production and Compliance)

KVLP Air Cap Selection Guide

- A larger air cap will provide lower cap pressures and higher air flow, but may yield courser atomization.
- Lower air cap pressures produce a softer spray and theoretically, improved transfer efficiency.
- Smaller air caps will produce finer atomization.
- Smaller air caps will require higher air cap pressures to atomize.
- Smaller fluid tips will work best with smaller air caps.
- Larger fluid tips will work best with larger air caps.
- As the fluid tip ID increases, the airflow through the atomizing section of the air cap decreases, as a result, there is less air available for atomization.
- Higher viscosity coatings and higher flow rates require more airflow for atomization.
- Atomizing air and horn air are completely independent in automatic spray guns.

Description	Part
General Purpose Air Caps	325717 325719 325721
Very Light Viscosity, Low Solids Air Caps	325714 325715 325716
Heavy Viscosity, High Solids, High Flow	325723 325725 325727

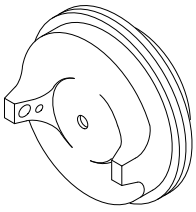

KVLP Production Air Cap

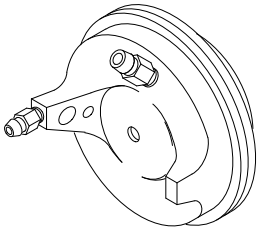

KVLP Compliance Air Cap

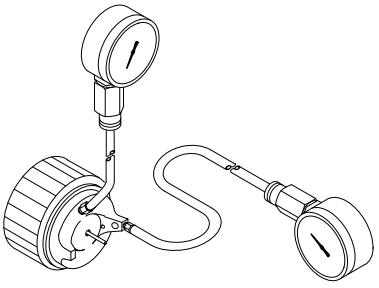

Compliance Kit

© 2013 Nordson Corporation
All rights reserved

KVLP Air Cap Application Key

Air Cap Locator	Coating Characteristics	Maximum Airflow (SCFM)	Typical Coatings
A	Very Light Viscosity, Very Low Solids (<25%) Low Flow (<5 oz/min)	10–12	Stains, Wash Primers, Bleaches, Fine Finish
B	Light Viscosity, Low Solids (25–30%) Low Flow (<5 oz/min) to Medium Flow (5–10 oz/min)	13–15	Stains, Wash Primers, ADPRO, Laquer Clear Coat, Fine Finish
C	Light Viscosity, Low Solids (25–30%) Medium Flow (5–10 oz/min)	17–20	Primers, ADPRO, Laquer Clear Coat, Metallics, Solid Colors, Enamels, Urethanes, Waterbornes
	Medium Viscosity, Medium Solids (30–50%) Low Flow (<5 oz/min)		
D	Medium Viscosity, Medium Solids (30–50%) Medium Flow (5–10 oz/min) to High Flow (10–20 oz/min)	22–25	Metallics, Solid Colors, Enamels, Urethanes, Waterbornes, Plural Component, Corrosion Protection
	Heavy Viscosity, High Solids (>75%) Low Flow (<5 oz/min)		
E	Medium Viscosity, Medium Solids (30–50%) High Flow (10–20 oz/min) to Very High Flow (>20 oz/min)	28–34	High Solids Enamels and Urethanes, High Solids Waterbornes, Plural Component, Corrosion Protection
	Heavy Viscosity, High Solids (>75%) Medium Flow (5–10 oz/min) to High Flow (10–20 oz/min)		
X	Not Recommended		

© 2013 Nordson Corporation
All rights reserved

Kinetix Accessories

KVLP Air Cap Selection Table

	Air Cap Part Number (Atomizing Air Hole Diameter)								
Tip Orifice (Inches)	**325714** (.140”)	**325715** (.150”)	**325716** (.160”)	**325717** (.170”)	**325719** (.190”)	**325721** (.210”)	**325723** (.230”)	**325725** (.250”)	**325727** (.270”)
0.030	A	A	B	B	C	D	E	X	X
0.035	A	A	B	B	C	D	E	E	X
0.040	A	A	B	B	C	D	E	E	E
0.050	A	A	A	B	C	C	D	E	E
0.060	X	A	A	A	B	C	D	E	E
0.070	X	X	A	A	B	C	D	E	E
0.080	X	X	X	A	B	C	D	E	E
Compliance Air Cap	325624	325625	325626	325627	325628	325629	325630	325631	325632
NOTE: Compliance air caps are modified caps for testing air pressure ONLY.									
Compliance Kits	325633	325634	325635	325636	325637	325638	325639	325640	325641
NOTE: Compliance kits include caps, gauges, and air tubing. Compliance kits are modified for testing ONLY.									

© 2013 Nordson Corporation
All rights reserved

Air Spray Fluid Tips

Air Spray Fluid Tip Selection Guide

- Understand flow rate required for application. Flow rate is a function of film build, pattern width, line speed, coating material solids, and spray gun travel speed.
- After making your initial tip ID choice, Nordson recommends having the next size lower and higher on hand as well.
- Flow rate gun using coating material.
- Make sure that un-atomized fluid stream breaks between 10 and 14 inches. Adjust fluid tip ID to get the correct flow rate and fluid stream break instead of increasing or decreasing fluid pressure.

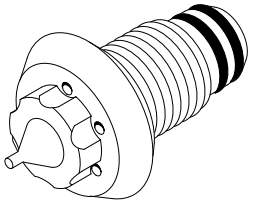

Air Spray Fluid Tip

Part	Description
336593	.030
336594	.040
336595	.046
336596	.059
336597	.070
336598	.080 (must use air cap 325617)
336599	.090 (must use air cap 325617)
336600	.100 (must use air cap 325617)
NOTE: All fluid tips come standard with Perlast O-rings. Spare fluid tip O-ring, part 336678.	

Conical Air Spray Nozzles

Conical Air Spray Nozzle Selection Guide

When selecting a nozzle, consider the type of coating material application.

Part	Description
336608	25.4 cm (10 in.)
336609	33.0 cm (13 in.)

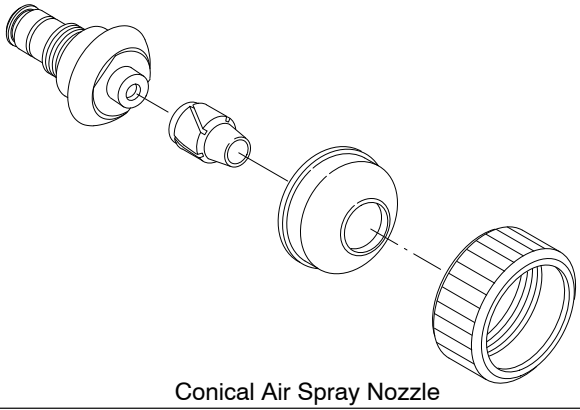

Conical Air Spray Nozzle

© 2013 Nordson Corporation
All rights reserved

Kinetix Accessories

Air Spray Air Caps

Air Spray Air Cap Selection Guide

Air caps are optional and must be ordered separately. Air caps are marked with the numbers in the description.

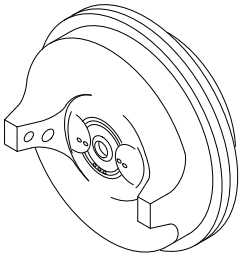

Air Spray Air Cap

Air Cap	Air Cap Description	Atomization Air Pressure	SCFM	Flow Rate	Fan Pattern Width	Usage
325615	985	Less than 2.41 bar (35 psi)	8.2 @ 20 psi	0.059–0.295 l/min (2–10 oz/min)	15.24–30.48 cm (6–12 in.)	Universal air cap; low flow rates
325616	986	2.07–4.14 bar (30–60 psi)	12 @ 40 psi	0.236–0.355 l/min (8–12 oz/min)	30.48–45.72 cm (12–18 in.)	Medium flow rates
325617	987	1.38–4.14 bar (20–60 psi)	16 @ 40 psi	0.296–0.592 l/min (10–20 oz/min)	30.48–45.72 cm (12–18 in.)	High flow rates, use with fluid tips 0.80 in. and larger.
325618	988	Less than 2.41 bar (35 psi)	12 @ 40 psi	0.059–0.326 l/min (2–11 oz/min)	30.48–45.72 cm (12–18 in.)	Low flow rates, high solids or metallics
325611	991	Less than 2.76 bar (40 psi)	8 @ 15 psi	0.059–0.326 l/min (2–11 oz/min)	less than or equal to 40.64 cm (16 in.)	Low flow rates, high viscosities
325612	992	Less than 2.76 bar (40 psi)	8 @ 15 psi	0.059–0.326 l/min (2–11 oz/min)	less than or equal to 40.64 cm (16 in.)	Low flow rates, high solids or metallics

© 2013 Nordson Corporation
All rights reserved

Isocoil® Assembly

The Isocoil assembly is an option for the Kinetix manual air spray and KVLP spray gun.

Isocoil assembly benefits:

- Provides the ability to spray highly conductive coatings (metallics)
- Compact and easy to install
- Can be retrofit to existing spray guns
- Light weight, maintains spray gun balance

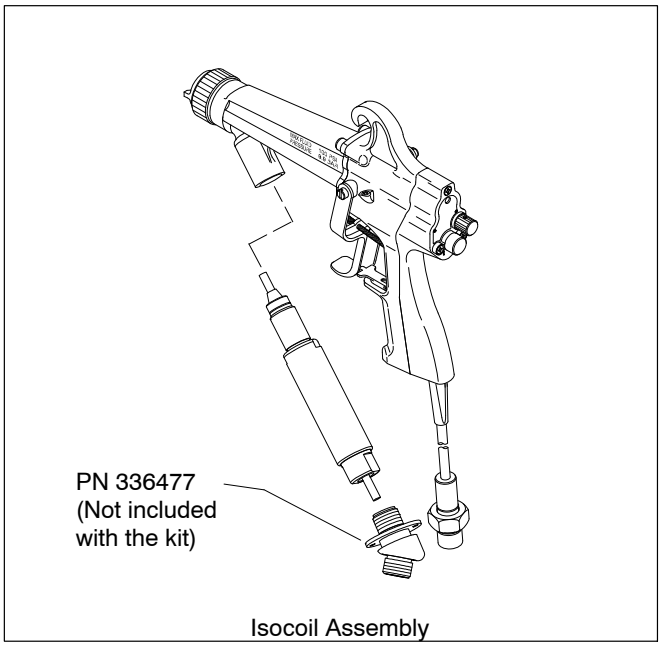

Isocoil Assembly

Ordering Information

Part	Description
1031047	Isocoil assembly, 0.250-in. OD x 0.093-in. ID, 24.5 in. lg
336477	Elbow, $^{3}/_{8}$-in. NPSM x $^{5}/_{8}$-20 UN-2A
NOTE A: Elbow, part 336477 is not included with the kit. If you are installing the Isocoil assembly on spray gun, parts 336715 or 336725, with a $^{1}/_{4}$-in. fluid hose, order this part separately.	

© 2013 Nordson Corporation
All rights reserved

Kinetix Accessories

Current Draw

Current draw is an important consideration when selecting the fluid hose or fluid tube. The longer the hose/tube, the lower the current draw. The hose or tube ID also affects the current draw. The smaller the hose/tube ID, the lower the current draw. The pressure drop through the hose/tube increases with length and increases as the hose/tube ID gets smaller. There is a tradeoff between effective fluid isolation to reduce current draw and minimizing pressure drop to maintain adequate fluid flow rates.

Current draw levels through the fluid hose or fluid tube of 20 μA or less should provide adequate charging of the coating material. Higher current draws may be acceptable if transfer efficiency levels and wrap are acceptable.

Table 1 Hose/Tube Lengths for a 20 μA Current Draw

Resistivity of Coating	Isocore Hose ($^1/_4$-in. ID)	Tubing ($^3/_8$-in. OD x 0.093-in. ID)	Isocoil Assembly (0.093-in. ID coiled fluid tube)
0.025 MΩ	21 ft	3.5 ft	
0.05 MΩ	16.5 ft	2.5 ft	2 ft*
0.075 MΩ	8 ft	1.5 ft	
0.1 MΩ	3.5 ft	1 ft	
0.25 MΩ	1.5 ft	1 ft	
* Two feet of 0.093-in. ID coiled fluid tube maintains a 20 μA current draw for a 0.06 MΩ coating.			

Hose and Tubing Options

$^1/_4$-in. ID Fluid Hose Spray Gun: A 50-ft cable, part 336462, or 100-ft cable, part 336466, is available with this spray gun. This spray gun is provided with a standard 8-ft Isocore hose, part 336357, and has a 0.250-in. ID. This hose is flexible, minimizes pressure drop and provides effective current isolation for most coating materials. An optional 25 ft version of this hose, part 336359, is also available.

$^3/_8$-in. OD Fluid Tube Spray Gun: A 50-ft cable, part 336462, or 100-ft cable, part 336466, is available with this spray gun. This spray gun uses a short length of $^3/_8$-in. OD x 0.093-in. ID fluid tubing, part 336468, which provides effective current isolation for most coatings.

Isocoil Assembly: 24-in. of 0.093-in. ID coiled fluid tube is included with the assembly.

Kinetix Gun Hose Length Required to Keep Current Draw at or Below 20 μA

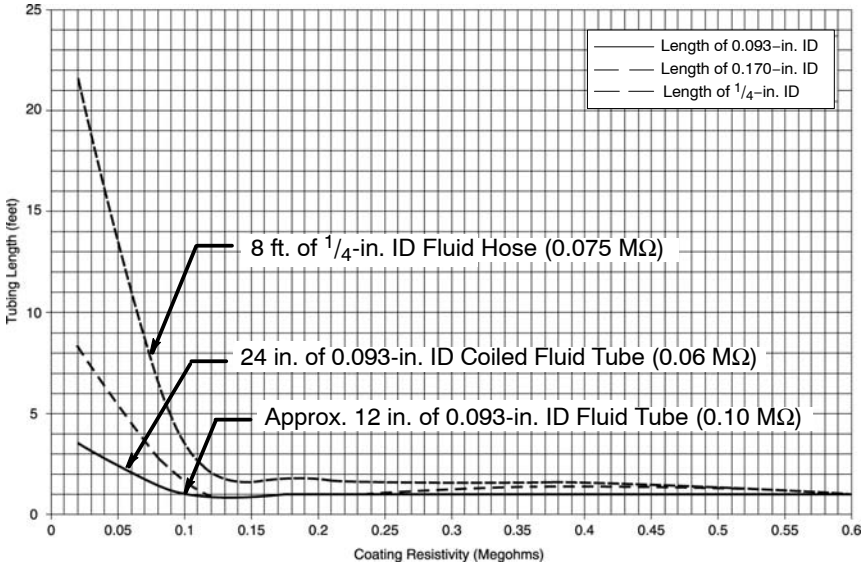

© 2013 Nordson Corporation
All rights reserved

Cross-Cut Nozzle Selection Guide

Blank nozzle gasket P/N 122481 is available to eliminate the use of a restrictor when desired. See "Filter Screen, Turbulence Plate and Restrictor Selection Chart" on page A37 in the *Nordson Airless Nozzle Catalog*.

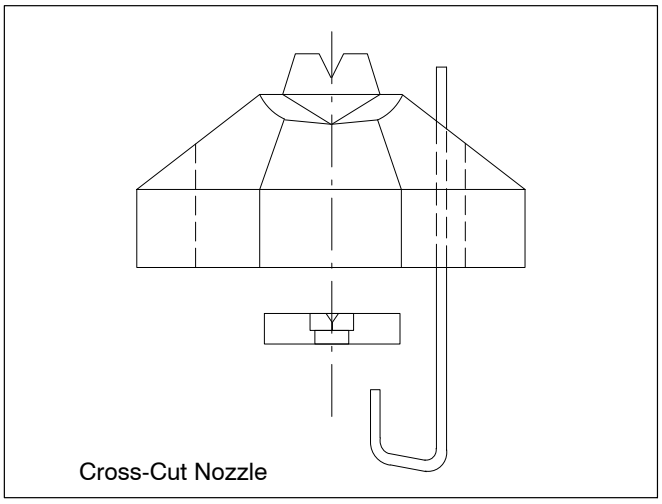

Cross-Cut Nozzle

Reference Size Flow/Pattern Width	Equivalent Diameter (in.)	Relative Film Build	Foot-notes	Pre-atomization Device (P/N)	Pattern Test			Part Number
					Min (in.)	Max (in.)	Distance	
.0075/08	0.0039	0.08	1, Ct	123050	1.38	1.63	1.00	1020261
.01/08	0.1067	0.11	1, Ct	123050	1.38	1.63	1.00	1020260
.02/08	0.0063	0.21	1, Ct	123050	1.38	1.63	1.00	1020262
.03/08	0.0077	0.32	1	123050	8.00	10.00	10.00	123201
.03/10	0.0077	0.26	1	123050	10.00	12.00	10.00	123202
.03/12	0.0077	0.22	1	123050	12.00	14.00	10.00	123203
.03/14	0.0077	0.19	1	123050	14.00	16.00	10.00	123204
.03/16	0.0077	0.17	1	123050	16.00	18.00	10.00	123205
.04/10	0.0089	0.35	1	123051	10.00	12.00	10.00	123206
.04/12	0.0089	0.30	1	123051	12.00	14.00	10.00	123207
.04/14	0.0089	0.26	1	123051	14.00	16.00	10.00	123208
.04/16	0.0089	0.23	1	123051	16.00	18.00	10.00	123209
.06/08	0.0110	0.64	1	123052	8.00	10.00	10.00	123210
.06/10	0.0110	0.52	1	123052	10.00	12.00	10.00	123211
.06/12	0.0110	0.44	1	123052	12.00	14.00	10.00	123212
.06/14	0.0110	0.38	1	123052	14.00	16.00	10.00	123213
.06/16	0.0110	0.34	1	123052	16.00	18.00	10.00	123214
FOOTNOTES: Ct = Close tolerance flow; 1 = Type 1 Carbide								

Continued on next page

© 2013 Nordson Corporation
All rights reserved

Kinetix Accessories

Reference Size Flow/Pattern Width	Equivalent Diameter (in.)	Relative Film Build	Foot-notes	Pre-atomization Device (P/N)	Pattern Test			Part Number
					Min (in.)	Max (in.)	Distance	
.06/18	0.0110	0.30	1	123052	18.00	20.00	10.00	123215
.06/20	0.0110	0.27	1	123052	20.00	22.00	10.00	123216
.06/22	0.0110	0.25	1	123052	22.00	24.00	10.00	123217
.06/24	0.0110	0.23	1	123052	24.00	26.00	10.00	123218
.09/08	0.0134	0.96	1	123053	8.00	10.00	10.00	123219
.09/10	0.0134	0.79	1	123053	10.00	12.00	10.00	123220
.09/12	0.0134	0.66	1	123053	12.00	14.00	10.00	123221
.09/14	0.0134	0.58	1	123053	14.00	16.00	10.00	123222
.09/16	0.0134	0.51	1	123053	16.00	18.00	10.00	123223
.09/18	0.0134	0.45	1	123053	18.00	20.00	10.00	123224
.09/20	0.0134	0.41	1	123053	20.00	22.00	10.00	123225
.09/22	0.0134	0.38	1	123053	22.00	24.00	10.00	123226
.09/24	0.0134	0.35	1	123053	24.00	26.00	10.00	123227
.09/26	0.0134	0.32	1	123053	26.00	28.00	10.00	123228
.09/28	0.0134	0.30	1	123053	28.00	30.00	10.00	123229
.12/08	0.0155	1.28	1	123054	8.00	10.00	10.00	1030649
.14/10	0.0167	1.22	1	123054	10.00	12.00	10.00	123230
.14/12	0.0167	1.03	1	123054	12.00	14.00	10.00	123231
.14/14	0.0167	0.90	1	123054	14.00	16.00	10.00	123232
.14/16	0.0167	0.79	1	123054	16.00	18.00	10.00	123233
.14/18	0.0167	0.71	1	123054	18.00	20.00	10.00	123234
.14/20	0.0167	0.64	1	123054	20.00	22.00	10.00	123235
.14/22	0.0167	0.58	1	123054	22.00	24.00	10.00	123236
.14/24	0.0167	0.54	1	123054	24.00	26.00	10.00	123237
.20/08	0.0200	2.13	1	123055	8.00	10.00	10.00	123246
.20/10	0.0200	1.75	1	123055	10.00	12.00	10.00	123272
.20/12	0.0200	1.48	1	123055	12.00	14.00	10.00	123238
FOOTNOTES: Ct = Close tolerance flow; 1 = Type 1 Carbide								

Continued on next page

© 2013 Nordson Corporation
All rights reserved

Cross-Cut Nozzle Selection Guide *(contd)*

Reference Size Flow/Pattern Width	Equivalent Diameter (in.)	Relative Film Build	Foot-notes	Pre-atomization Device (P/N)	Pattern Test			Part Number
					Min (in.)	Max (in.)	Distance	
.20/14	0.0200	1.28	1	123055	14.00	16.00	10.00	123239
.20/16	0.0200	1.13	1	123055	16.00	18.00	10.00	123240
.20/18	0.0200	1.01	1	123055	18.00	20.00	10.00	123241
.20/20	0.0200	0.91	1	123055	20.00	22.00	10.00	123242
.20/22	0.0200	0.83	1	123055	22.00	24.00	10.00	123243
.20/24	0.0200	0.77	1	123055	24.00	26.00	10.00	123244
.20/26	0.0200	0.71	1	123055	26.00	28.00	10.00	123245
.25/12	0.0224	1.85	1	123056	12.00	14.00	10.00	123273
.25/14	0.0224	1.60	1	123056	14.00	16.00	10.00	123274
.30/12	0.0245	2.22	1	123056	12.00	14.00	10.00	123247
.30/14	0.0245	1.92	1	123056	14.00	16.00	10.00	123248
.30/16	0.0245	1.69	1	123056	16.00	18.00	10.00	123249
.30/18	0.0245	1.52	1	123056	18.00	20.00	10.00	123250
.30/20	0.0245	1.37	1	123056	20.00	22.00	10.00	123251
.30/22	0.0245	1.25	1	123056	22.00	24.00	10.00	123252
.30/24	0.0245	1.15	1	123056	24.00	26.00	10.00	123253
.30/26	0.0245	1.07	1	123056	26.00	28.00	10.00	123254
.30/28	0.0245	0.99	1	123056	28.00	30.00	10.00	123255
.45/14	0.0300	2.88	1	122481	14.00	16.00	10.00	123256
.45/16	0.0300	2.54	1	122481	16.00	18.00	10.00	123257
.45/18	0.0300	2.27	1	122481	18.00	20.00	10.00	123258
.45/20	0.0300	2.06	1	122481	20.00	22.00	10.00	123259
.45/22	0.0300	1.88	1	122481	22.00	24.00	10.00	123260
.45/24	0.0300	1.73	1	122481	24.00	26.00	10.00	123261
.45/26	0.0300	1.60	1	122481	26.00	28.00	10.00	123262
.45/28	0.0300	1.49	1	122481	28.00	30.00	10.00	123263
FOOTNOTES: Ct = Close tolerance flow; 1 = Type 1 Carbide								

© 2013 Nordson Corporation
All rights reserved

Kinetix Accessories

Dome Nozzle Selection Guide

Blank nozzle gasket P/N 122481 is available to eliminate the use of a restrictor when desired. See "Filter Screen, Turbulence Plate and Restrictor Selection Chart" on page A37 in the *Nordson Airless Nozzle Catalog*.

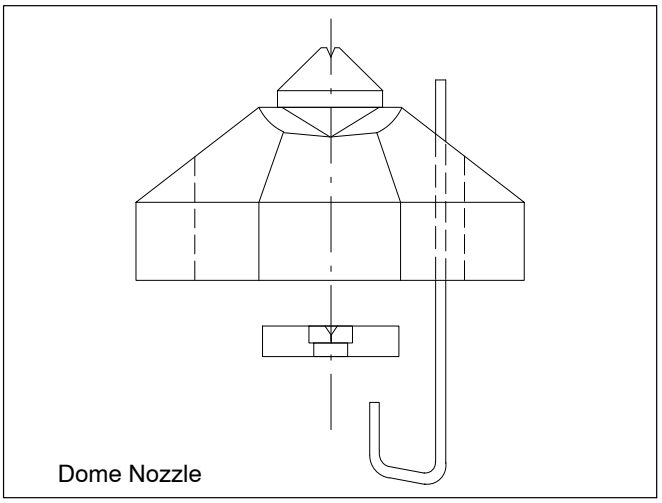

Dome Nozzle

Reference Size Flow/Pattern Width	Equivalent Diameter (in.)	Relative Film Build	Foot-notes	Pre-atomization Device (P/N)	Pattern Test			Part Number
					Min (in.)	Max (in.)	Distance	
.03/02	0.0077	0.96	1	123050	2.00	4.00	10.00	123525
.03/04	0.0077	0.58	1	123050	4.00	6.00	10.00	123526
.03/06	0.0077	0.41	1	123050	6.00	8.00	10.00	123527
.03/08	0.0077	0.32	1	123050	8.00	10.00	10.00	123528
.04/02	0.0089	1.28	1	123051	2.00	4.00	10.00	123529
.04/04	0.0089	0.77	1	123051	4.00	6.00	10.00	123530
.04/06	0.0089	0.55	1	123051	6.00	8.00	10.00	123531
.04/08	0.0089	0.43	1	123051	8.00	10.00	10.00	123532
.04/10	0.0089	0.35	1	123051	10.00	12.00	10.00	123533
.06/02	0.0110	1.92	1	123052	2.00	4.00	10.00	123534
.06/04	0.0110	1.15	1	123052	4.00	6.00	10.00	123535
.06/06	0.0110	0.82	1	123052	6.00	8.00	10.00	123536
.06/08	0.0110	0.64	1	123052	8.00	10.00	10.00	123537
.06/10	0.0110	0.52	1	123052	10.00	12.00	10.00	123538
.06/12	0.0110	0.44	1	123052	12.00	14.00	10.00	123539
.09/02	0.0134	2.88	1	123053	2.00	4.00	10.00	123540
.09/04	0.0134	1.73	1	123053	4.00	6.00	10.00	123541
FOOTNOTES: Ct = Close tolerance flow; 1 = Type 1 Carbide								

Continued on next page

© 2013 Nordson Corporation
All rights reserved

Dome Nozzle Selection Guide *(contd)*

Reference Size Flow/Pattern Width	Equivalent Diameter (in.)	Relative Film Build	Foot-notes	Pre-atomization Device (P/N)	Pattern Test			Part Number
					Min (in.)	Max (in.)	Distance	
.09/06	0.0134	1.23	1	123053	6.00	8.00	10.00	123542
.09/08	0.0134	0.96	1	123053	8.00	10.00	10.00	123543
.09/10	0.0134	0.79	1	123053	10.00	12.00	10.00	123544
.09/12	0.0134	0.66	1	123053	12.00	14.00	10.00	123545
.09/14	0.0134	0.58	1	123053	14.00	16.00	10.00	123546
.14/02	0.0167	4.48	1	123054	2.00	4.00	10.00	123547
.14/04	0.0167	2.69	1	123054	4.00	6.00	10.00	123548
.14/06	0.0167	1.92	1	123054	6.00	8.00	10.00	123549
.14/08	0.0167	1.49	1	123054	8.00	10.00	10.00	123550
.14/10	0.0167	1.22	1	123054	10.00	12.00	10.00	123551
.14/12	0.0167	1.03	1	123054	12.00	14.00	10.00	123552
.14/14	0.0167	0.90	1	123054	14.00	16.00	10.00	123553
.14/16	0.0167	0.79	1	123054	16.00	18.00	10.00	123554
.20/04	0.0200	3.84	1	123055	4.00	6.00	10.00	123555
.20/06	0.0200	2.74	1	123055	6.00	8.00	10.00	123556
.20/08	0.0200	2.13	1	123055	8.00	10.00	10.00	123557
.20/10	0.0200	1.75	1	123055	10.00	12.00	10.00	123558
.20/12	0.0200	1.48	1	123055	12.00	14.00	10.00	123559
.20/14	0.0200	1.28	1	123055	14.00	16.00	10.00	123560
.20/16	0.0200	1.13	1	123055	16.00	18.00	10.00	123561
.20/18	0.0200	1.01	1	123055	18.00	20.00	10.00	123562
.30/06	0.0245	4.11	1	123056	6.00	8.00	10.00	123563
.30/08	0.0245	3.20	1	123056	8.00	10.00	10.00	123564
.30/10	0.0245	2.62	1	123056	10.00	12.00	10.00	123565
.30/12	0.0245	2.22	1	123056	12.00	14.00	10.00	123566
.30/14	0.0245	1.92	1	123056	14.00	16.00	10.00	123567
.30/16	0.0245	1.69	1	123056	16.00	18.00	10.00	123568
FOOTNOTES: Ct = Close tolerance flow; 1 = Type 1 Carbide								

Continued on next page

© 2013 Nordson Corporation
All rights reserved

Kinetix Accessories

Reference Size Flow/Pattern Width	Equivalent Diameter (in.)	Relative Film Build	Foot-notes	Pre-atomization Device (P/N)	Pattern Test			Part Number
					Min (in.)	Max (in.)	Distance	
.30/18	0.0245	1.52	1	123056	18.00	20.00	10.00	123569
.45/08	0.0300	4.80	1	122481	8.00	10.00	10.00	123570
.45/10	0.0300	3.93	1	122481	10.00	12.00	10.00	123571
.45/12	0.0300	3.32	1	122481	12.00	14.00	10.00	123572
.45/14	0.0300	2.88	1	122481	14.00	16.00	10.00	123573
.45/16	0.0300	2.54	1	122481	16.00	18.00	10.00	123574
.45/18	0.0300	2.27	1	122481	18.00	20.00	10.00	123575
.45/20	0.0300	2.06	1	122481	20.00	22.00	10.00	123576
.45/22	0.0300	1.88	1	122481	22.00	24.00	10.00	123577
FOOTNOTES: Ct = Close tolerance flow; 1 = Type 1 Carbide								

© 2013 Nordson Corporation
All rights reserved

Repair Kits

Part	Description
Air Spray, KVLP, Airless, Air-Assisted Airless (AAA) and Watermark — Manual Only	
336679	Fluid seal kit, Perlast — Recommended
336633	Fluid seal kit, hotpaint
336634	Air seal kit
325657	Air valve kit
1050238	Packing cartridge kit
336505	Multiplier kit
336631	Trigger lock kit
336462	50-ft Kinetix low-voltage supply cable (not waterborne)
336531	50-ft Kinetix low-voltage supply cable extension (not waterborne)
Air Spray, KVLP, Airless, AAA and Watermark — Automatic Only	
336679	Fluid seal kit, Perlast — Recommended
336633	Fluid seal kit, hotpaint
336656	Air seal kit
1050238	Packing cartridge kit
325529	Quick exhaust valve
336505	Multiplier kit
336531	50-ft Kinetix low-voltage supply cable extension (not waterborne)
Airless and AAA Only (Manual and Automatic)	
336675	Gasket restrictor washer — package of 12
336676	Gasket restrictor washer — package of 100
122481	Gasket (when no restrictor is used) — package of 10
940076	PTFE retaining O-ring (do not use with gasket or restrictors)
NOTE: Refer to the *Nordson Airless Nozzle Catalog* for nozzles and restrictors.	
336384	Electrode
336636	Ball tip kit
336560	Fluid tip kit — high pressure
Watermark, KVLP/Air Spray Only (Manual and Automatic)	
336556	Needle w/resistor kit (not Watermark)
1028630	Needle nose pliers, bent
1028631	Needle removal tool

© 2013 Nordson Corporation
All rights reserved

Kinetix Accessories

Power Supplies and Options

Part	Description	Notes
1083263	Controller, manual, IPS-20	
1083504	Controller, automatic, IPS-20	
336690	Power supply mounting kit	

Manual Air Spray, KVLP, AAA, and Watermark Air Hoses

Part	Description
1074130	Grounded air hose, 30 ft, $^3/_8$-in. ID, w/fittings
1074131	Grounded air hose, 50 ft, $^3/_8$-in. ID, w/fittings
1074132	Grounded air hose, 100 ft, $^3/_8$-in. ID, w/fittings

Fluid Hoses and Accessories for Manual Spray Guns (Kit Part Numbers)

Part (Standard)	Part (Optional)	Description	Gun Type
336357		Standard hose, 8 ft, 0.250-in. ID, low pressure (standard with spray guns, 336715 and 336725)	Manual KVLP or air spray 100 psi maximum pressure
	336359	Optional hose, 25 ft, 0.250-in. ID, low pressure	
	336470	Optional hose-to-hose coupling, $^3/_8$-in. NPS x $^3/_8$-in. NPS, low pressure	
	336460	Optional quick disconnect tube and ferrule kit, low pressure	
336460		Optional quick disconnect tube and ferrule kit, low pressure (standard with spray guns, 336724 and 336728)	Manual KVLP or air spray 100 psi maximum pressure
	336495	Optional quick disconnect connector, $^3/_8$-in. NPS	
	336496	Optional circulation restrictor, $^3/_8$-in. NPS	
	336497	Optional swivel stem, $^3/_8$-in. NPS	
336722		Standard hose, 25 ft, 0.250-in. ID with ground strap, low pressure	Manual waterborne 100 psi maximum pressure
336337		Standard hose, 1 ft, 0.250-in. ID, high pressure	Manual air-assisted or airless 1500 psi maximum pressure
NOTE: Standard hoses are shipped with spray gun.			

© 2013 Nordson Corporation
All rights reserved

Kinetix Accessories

Fluid Hoses and Accessories for Automatic Spray Guns (Kit Part Numbers)

Part (Standard)	Part (Optional)	Description	Gun Type
336689		Standard ferrule kit, to be used with 0.250-in. OD tubing	Automatic KVLP or air spray 100 psi maximum pressure
336688		Standard ferrule kit, to be used with 0.375-in. OD tubing	
	*900589	Optional hose, 0.25-in. OD x 0.093-in. ID PTFE tubing	
	*900561	Optional hose, 0.375-in. OD x 0.188-in. ID PTFE tubing	
	*146132	Optional hose, 0.375-in. OD x 0.250-in. ID PTFE tubing	
	336659	Optional hose, 25 ft, 0.250-in. ID, low pressure	
	336470	Optional hose-to-hose coupling, $^3/_8$-in. NPS x $^3/_8$-in. NPS, low pressure	
336629		Standard hose, 1.5 ft, 0.250-in. ID, high pressure	Automatic air-assisted or airless 1500 psi maximum pressure
	336628	Optional hose, 25 ft, 0.250-in. ID, high pressure	
336723		Standard hose, 25 ft, 0.250-in. ID, low pressure	Automatic 100 psi waterborne
NOTES: Standard hoses are shipped with spray gun. *Sold in one-foot increments. Requires a ferrule kit.			

Air Tubing Option for Automatic Low-Pressure Spray Gun

Part	Description
900557	Nylon tubing, air, 0.375-in. OD x 0.275-in. ID
900556	Nylon tubing, air, 0.250-in. OD x 0.180-in. ID
NOTE: Spray gun comes with push-fit air fitting included.	

© 2013 Nordson Corporation
All rights reserved

© 2013 Nordson Corporation
All rights reserved

Air Caps and Fluid Tips

The following pages contain:

- TC−09−01 Air Spray Fluid Tips and Air Caps
- TC−09−02 HVLP Fluid Tips and Air Caps

© 2013 Nordson Corporation
All rights reserved

© 2013 Nordson Corporation
All rights reserved

Section 2
Non-Electrostatic Spray Guns

Trilogy AAA Manual Guns 2-1
Description 2-1
Features 2-1
Specifications 2-1
Ordering Information 2-2
Trilogy AAA Manual Gun Exploded View and Parts List 2-3

Trilogy AAA-LT Manual Guns 2-7
Description 2-7
Features 2-7
Specifications 2-7
Ordering Information 2-8
Trilogy AAA-LT Manual Gun Exploded View and Parts List 2-9

Trilogy AAA Automatic Guns 2-13
Description 2-13
Features 2-13
Specifications 2-13
Ordering Information 2-14
Trilogy AAA Automatic Gun Exploded View and Parts List 2-15

Trilogy AS and LVLP Manual Spray Guns 2-19
Description 2-19
Features and Benefits 2-19

© 2013 Nordson Corporation
All rights reserved

Table of Contents

Trilogy AS and LVLP Manual Spray Guns 2-20

Specifications 2-20

Ordering Information 2-20

Trilogy AS and LVLP Pressure/Siphon Feed Gun Exploded View and Parts List 2-22

Trilogy AS and LVLP Gravity Feed Gun Exploded View and Parts List 2-24

Trilogy GP Manual Spray Guns 2-27

Description 2-27

Features and Benefits 2-27

Specifications 2-27

Trilogy GP Manual Spray Gun 2-28

Ordering Information 2-28

Trilogy GP Manual Spray Gun Exploded View and Parts List 2-30

Trilogy AC Manual Spray Guns 2-33

Description 2-33

Features and Benefits 2-33

Specifications 2-33

Trilogy AC Manual Spray Guns 2-34

Ordering Information 2-34

Trilogy AC Manual Spray Gun Exploded View and Parts List 2-35

Trilogy AS, LP, and QC Automatic 2-39

Description 2-39

Features and Benefits 2-39

Trilogy AS, LP, and QC Automatic 2-40

Specifications 2-40

Ordering Information 2-41

Nozzles 2-41

Spare Part Kits 2-41

Trilogy AS and LP Automatic Spray Gun Exploded View and Parts List 2-42

Trilogy QC Automatic Spray Gun Exploded View and Parts List 2-44

© 2013 Nordson Corporation
All rights reserved

A4B Manual Airless Spray Gun 2-47
Description 2-47
Features 2-47
Specifications 2-48
Ordering Information 2-49

A7A Automatic Airless Spray Gun 2-51
Description 2-51
Features 2-51
Specifications 2-52
Ordering Information 2-52
Fittings 2-54

A7A Modular Automatic Airless Spray Gun 2-55
Description 2-55
Nozzles 2-55
Parts 2-56
Single Gun 2-56
Dual Gun 2-58
Options 2-60
Service Kits 2-60
Service Parts 2-60

AD-29 and AD-29A Automatic Air Spray Gun 2-61
Description 2-61
Features 2-61
Specifications 2-61
Ordering Information 2-62

Maverick Air Spray Gun 2-63
Description 2-63
Features 2-63
Specifications 2-63
Ordering Information 2-64

Maverick HVLP Spray Gun 2-67
Description 2-67
Features 2-67
Specifications 2-67

© 2013 Nordson Corporation
All rights reserved

Table of Contents

Maverick HVLP Spray Gun 2-68

Ordering Information 2-68

Prism® Non-Electrostatic Spray Guns 2-71

Available Models (Non-circulating models shown. Circulating models also available.) 2-71

Prism Low-Pressure Automatic Spray Guns 2-73

Description 2-73

Features 2-73

Specifications 2-74

Ordering Information 2-75

Accessories 2-77

HVLP Fluid Tips 2-77

HVLP Fluid Tip Selection Guide 2-77

HVLP Air Caps (Production and Compliance) 2-78

HVLP Air Cap Selection Guide 2-78

HVLP Air Cap Application Key 2-79

HVLP Air Cap Selection Table 2-80

Air Spray Fluid Tips 2-81

Air Spray Fluid Tip Selection Guide 2-81

Conical Air Spray Nozzles 2-81

Conical Air Spray Nozzle Selection Guide 2-81

Air Spray Air Caps 2-82

Air Spray Air Cap Selection Guide 2-82

Prism Airless and Air-Assisted Airless Automatic Spray Guns 2-83

Cross-Cut Nozzle Selection Guide 2-83

Dome Nozzle Selection Guide 2-86

Non-Electrostatic Accessories 2-89

Description 2-89

Gun Mounting Bar 2-89

Unvalved Straight-Flanged Mount Nozzle Extensions for A4B and A7A Guns, Brass 2-89

© 2013 Nordson Corporation
All rights reserved

Trilogy AAA Manual Guns

Description

The Trilogy AAA gun combines excellent finish quality and ease-of-use for a variety of liquid coating applications. Incorporating innovative injector technology, the Trilogy AAA gun provides excellent atomization and is available with an extensive range of nozzles. In addition, the Trilogy AAA gun is equipped with a separate round and flat spray pattern adjustment knob, providing a superior level of versatility in spray options

Designed for easy operation, the Trilogy AAA gun uses exceptionally low trigger force to reduce arm fatigue, making the operator's job easier. Its lightweight design and balanced center of gravity further enhance ergonomic handling and comfort. In addition, the gun incorporates an externally adjustable packing cartridge and complete paint needle removal from the rear of the gun for easy maintenance and cleaning.

The Trilogy AAA gun is available in two configurations – U.S. And Metric – capable up to 3625 psi (250 bar).



Manual Spray Gun

Features

- **Innovative injector technology** – produces fine atomization and excellent part finish.
- **Spray pattern adjustment knob** – for a superior level of spray versatility.
- **Externally adjustable packing cartridge and rear paint needle removal** – provide easy maintenance.
- **Exceptionally low trigger force** – reduces operator fatigue.
- **Lightweight, balanced design** – enhance handling and comfort.
- **Extensive nozzle/filter options** – for application versatility.

Specifications

Material pressure	Up to 3625 psi (250 bar)
Air consumption @ 29 psi (2 bar)	4.0 cfm (115 l/min)
Transfer efficiency	Approximately 85%
Weight **with paint and swivel joint**	1.32 lbs (598 g)
Available nozzle sizes **Spray angle – 40° to 60°**	.009 to .031 in (0.23 to 0.78 mm)
Fluid fitting	½"-20 JIC or ¼" NPSM
Air fitting	¼" NPT or ¼" G

© 2013 Nordson Corporation
All rights reserved

Trilogy AAA Manual Guns

Ordering Information

Part	Description	Note
	Trilogy Air Assist Airless (AAA) Manual Gun	
1600761 1600793	Gun, manual, NES, Trilogy AAA Gun, manual, NES, Trilogy AAA, metric	
	Kits	
1601014 1601015	Seal Kit Repair Kit	 A
	Filters	
1600994 1600993 1600992	80 mesh 150 mesh 295 mesh	
	Nozzles	
1600878 1600879 1600880 1600881 1600882 1600883 1600884 1600885 1600886	0.013 in (0.33 mm), 50° 0.009 in (0.23 mm), 40° 0.009 in (0.23 mm), 50° 0.011 in (0.28 mm), 40° 0.011 in (0.28 mm), 50° 0.015 in (0.38 mm), 50° 0.015 in (0.38 mm), 60° 0.031 in (0.78 mm), 50° 0.031 in (0.78 mm), 50°	B

NOTE A: Repair kit includes the seal kit.
B: Supplied with gun.

© 2013 Nordson Corporation
All rights reserved

Trilogy AAA Manual Gun Exploded View and Parts List

© 2013 Nordson Corporation
All rights reserved

Trilogy AAA Manual Guns

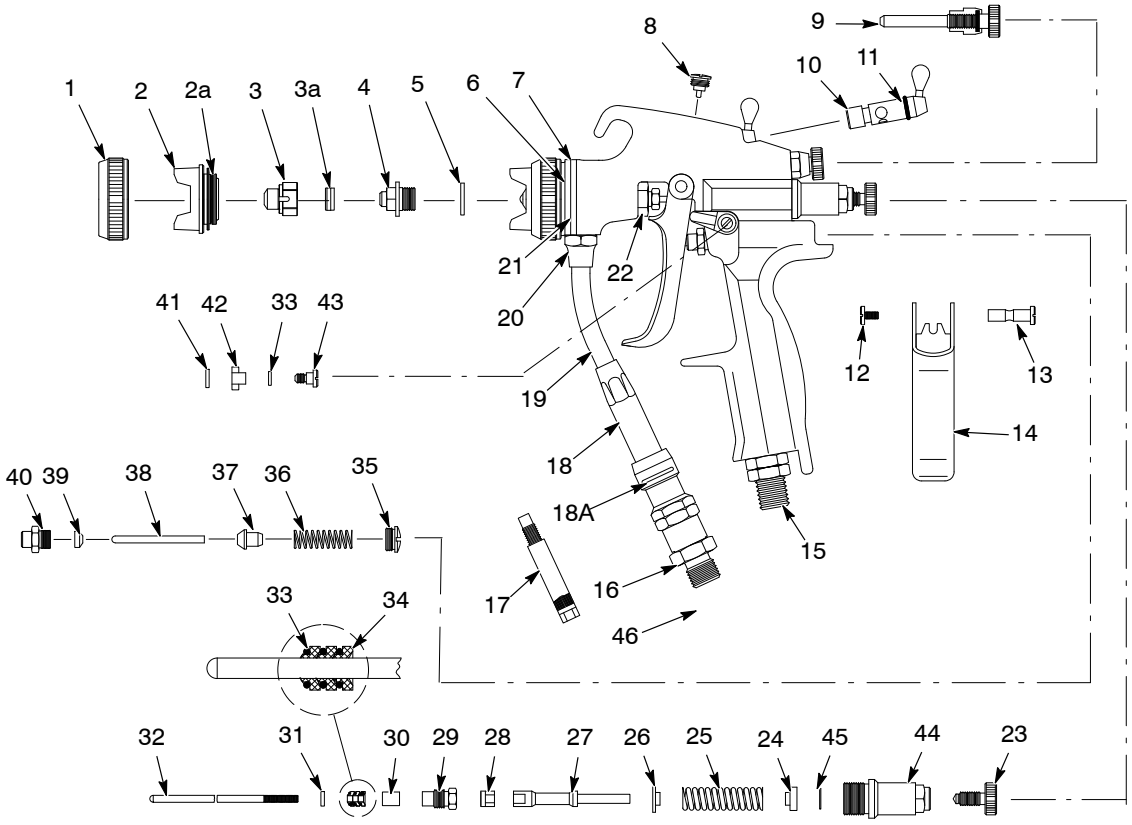

© 2013 Nordson Corporation
All rights reserved

Trilogy AAA Manual Guns

Item	Part	Description	Quantity	Note
–	1600761	Gun, manual, NES, Trilogy AAA, U.S.	1	
–	1600793	Gun, manual, NES, Trilogy AAA, metric	1	
1	1601010	• Retainer, air cap, AAA, Trilogy NES	1	
2	1600913	• Air cap, AAA, Trilogy NES	1	
2a	–––––––	• Seal ring	1	A, B
3	1600878	• Nozzle, 0.33 mm, 50 degree, Trilogy NES	1	C
3a	–––––––	• Seal	1	A, B
4	–––––––	• Screw, seal retaining	1	B
5	–––––––	• Seal ring, aluminum	1	A, B
6	–––––––	• O-ring, 3.5 x 1.0 mm, Viton	1	A, B
7	–––––––	• Seal	2	A, B
8	–––––––	• Screw, locking	1	B
9	1600897	• Screw, fan adjustment, AAA, Trilogy NES	1	
10	–––––––	• Regulator, air	1	B
11	–––––––	• O-ring, 7.0 x 1.0 mm, Viton	1	A, B
12	–––––––	• Screw, flat head	1	B
13	–––––––	• Axle, trigger	1	B
14	1601012	• Trigger, AAA, Trilogy NES	1	
15	1600867	• Connector, air, 1/4 G, AAA, Trilogy NES	1	E
15	1600940	• Connector, air, 1/4 NPT, AAA, Trilogy NES	1	E
16	1601013	• Connector, fluid, 1/4 NPSM, AAA, Trilogy NES	1	
17	1600992	• Filter, 295 mesh / 50 micron, red, AAA	1	D
17	1600993	• Filter, 150 mesh / 100 micron, yellow, AAA	1	D
17	1600994	• Filter, 80 mesh / 180 micron, white, AAA	1	D
18	1601008	• Base, filter, AAA, Trilogy NES	1	
18A	–––––––	• O-ring, 12 x 1.5 mm, Viton	1	A
19	1601007	• Tube, fluid, upper, AAA, Trilogy NES	1	
20	1601006	• Nut, fluid tube, AAA, Trilogy NES	1	
21	1601009	• Chamber, atomizing, AAA, Trilogy NES	1	
22	1601001	• Nut, chamber, AAA, Trilogy NES	1	
23	1600997	• Screw, needle tension, AAA, Trilogy NES	1	
24	1600996	• Washer, small, needle, AAA, Trilogy NES	1	
25	–––––––	• Spring, compression	1	B
26	1600995	• Washer, large, needle, AAA, Trilogy NES	1	
27	1601005	• Extension, needle, AAA, Trilogy NES	1	
28	1601004	• Carrier, needle, AAA, Trilogy NES	1	
29	1601003	• Gland, packing, AAA, Trilogy NES	1	
30	1601002	• Collar, gland, AAA, Trilogy NES	1	
31	1601011	• Seal, packing, AAA, Trilogy NES	1	
32	1600914	• Needle, AAA, Trilogy NES	1	B
33	1600847	• O-ring, 4.0 x 1.2 mm, Viton	4	A, B
34	–––––––	• Seal, cup, inverted	3	A, B
35	–––––––	• Screw, locking	1	B
36	–––––––	• Spring, compression	1	B
37	–––––––	• Valve, air	1	A, B
38	–––––––	• Pin	1	B
39	–––––––	• Seal, valve, packing gland	1	A, B

Continued...

© 2013 Nordson Corporation
All rights reserved

Non-Electrostatic Guns

Item	Part	Description	Quantity	Note
40	–––––––	• Valve, packing gland	1	B
41	1600868	• Washer	1	
42	1600999	• Lock, trigger, AAA, Trilogy NES	1	
43	1600957	• Screw, trigger lock, AAA, Trilogy NES	1	
44	1601000	• Cap, spring, AAA, Trilogy NES	1	
45	1600998	• Prong, ring, AAA, Trilogy NES	1	
46	1601887	• Connector, straight, 1/1–20 JIC x 1/4 G	1	

NOTE A: Included in 1601014 Kit, seal, AAA, Trilogy NES. This kit is also included in the 1601015 repair kit.

B: Included in 1601015 Kit, repair, AAA, Trilogy NES. This kit also includes the 1601014 seal kit.

C: Refer to the *Nozzles* list for additional nozzles.

D: Always use a filter with a mesh smaller than the nozzle size.

E: Order the correct connector for your application.

© 2013 Nordson Corporation
All rights reserved

Trilogy AAA-LT Manual Guns

Description

The Trilogy AAA-LT gun combines excellent finish quality and ease-of-use for a variety of liquid coating applications. The Trilogy AAA-LT gun provides excellent atomization and is available with an extensive range of nozzles. In addition, the Trilogy AAA-LT gun is equipped with a separate round and flat pattern adjustment know, providing a superior level of versatility in spray options.

Designed for easy operation, the Trilogy AAA-LT gun uses exceptionally low trigger force to reduce arm fatigue, making the operator's job easier. Its lightweight design and balanced center of gravity further enhances ergonomic handling and comfort. In addition, the gun incorporates externally adjustable needle packing cartridge and complete paint needle removal from the back of the gun for easy maintenance and cleaning.

The Trilogy AAA-LT gun is available in two configurations –
U.S. and Metric – capable up to 2900 psi (200 bar).



LT Manual Spray Gun

Features

- **Lightweight, balanced design** – enhances handling and comfort.
- **Spray pattern adjustment knob** – for a superior level of spray versatility.
- **Externally adjustable packing cartridge and paint needle removal from the back** – provides easy maintenance.
- **Exceptionally low trigger force** – reduces operator fatigue.
- **Extensive nozzle options** – for application versatility.
- **Available in U.S. and Metric versions.**

Specifications

Material pressure	Up to 2900 psi (200 bar)
Air consumption @ 29 psi (2 bar)	4.0 cfm (115 l/min)
Transfer efficiency	Approximately 85%
Weight **with paint and swivel joint**	1.21 lbs (550 g)
Available nozzle sizes **Spray angle – 40° to 60°**	.009 to .031 in (0.23 to 0.78 mm)
Fluid fitting	½"-20 JIC or ¼" NPSM
Air fitting	¼" NPT or ¼" G

© 2013 Nordson Corporation
All rights reserved

Trilogy AAA-LT Manual Guns

Ordering Information

Part	Description	Note
	Trilogy Air Assist Airless (AAA-LT) Manual Gun	
1600764 1600796	Gun, manual, NES, Trilogy AAA-LT, U.S. Gun, manual, NES, Trilogy AAA-LT, metric	
	Kits	
1601014 1601024	Seal Kit Repair Kit	 A
1601020	**Filter**	B
	Nozzles	
1600887 1600888 1600889 1600890 1600891 1600892 1600893 1600894 1600895	0.013 in (0.33 mm), 50° 0.009 in (0.23 mm), 40° 0.009 in (0.23 mm), 50° 0.011 in (0.28 mm), 40° 0.011 in (0.28 mm), 50° 0.015 in (0.38 mm), 50° 0.015 in (0.38 mm), 60° 0.031 in (0.78 mm), 50° 0.031 in (0.78 mm), 50°	B

NOTE A: Repair kit includes the seal kit.
B: Supplied with gun.

© 2013 Nordson Corporation
All rights reserved

Trilogy AAA-LT Manual Gun Exploded View and Parts List

© 2013 Nordson Corporation
All rights reserved

Trilogy AAA-LT Manual Guns

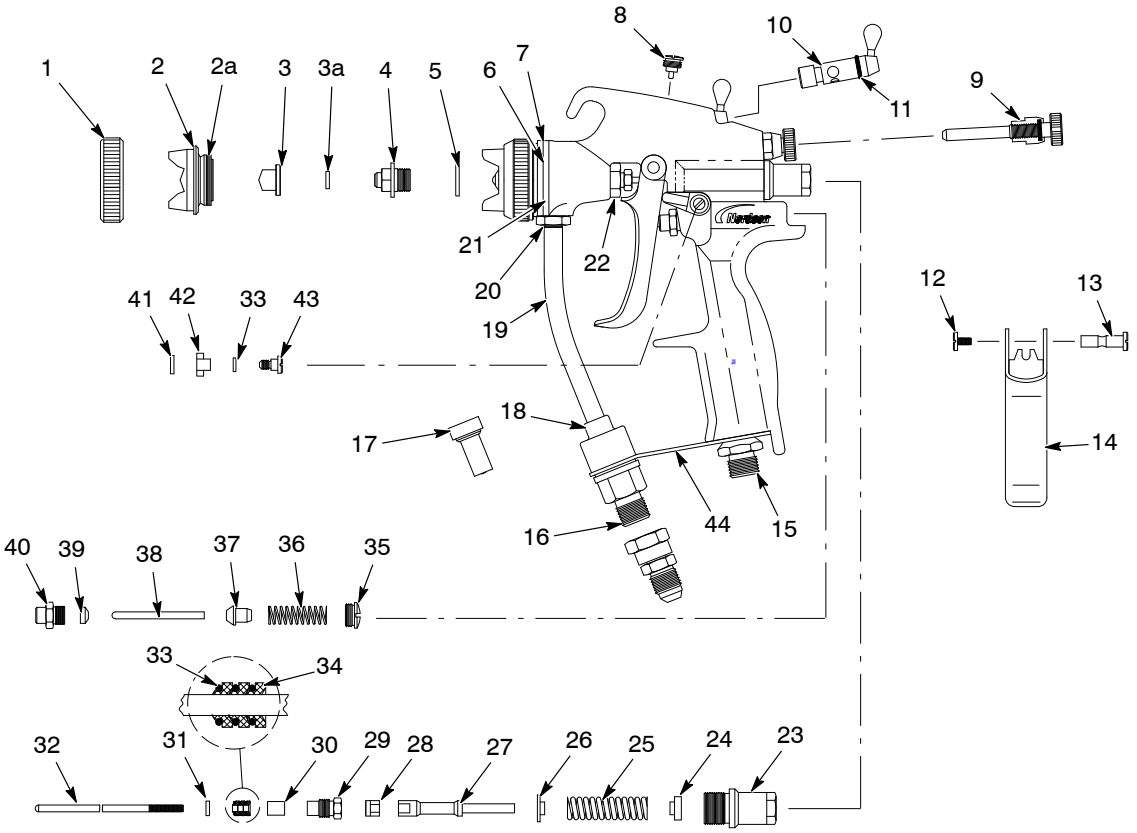

Item	Part	Description	Quantity	Note
–	1600764	Gun, manual, NES, Trilogy AAA LT	1	
	1600796	Gun, manual, NES, Trilogy AAA LT, metric	1	
1	1601016	• Retainer, air cap, AAA LT, Trilogy NES	1	
2	1600938	• Air cap, AAA LT, Trilogy NES	1	
2a	------	• Ring, seal	1	A, B
3	1600887	• Nozzle, .33 mm, 50 degree, Trilogy, NES	1	C
3a	------	• Seal	1	A, B
4	------	• Screw, seal retaining	1	B
5	------	• Ring, seal, aluminum	1	A, B
6	------	• O-ring, 3.5 x 1.0 mm, Viton	1	A, B
7	------	• Seal	2	A, B
8	------	• Screw, locking	1	B
9	1600897	• Screw, fan adjustment, AAA, Trilogy NES	1	
10	------	• Regulator, air	1	B
11	------	• O-ring, 7.0 x 1.0 mm, Viton	1	A, B
12	------	• Screw, flat head	1	B
13	------	• Axle, trigger	1	B
14	1601012	• Trigger, AAA, Trilogy NES	1	
15	1600939	• Connector, nipple, 1/4 G, AAA, Trilogy NES	1	D
15	1600940	• Connector, air, 1/4 NPT, AAA, Trilogy NES	1	D
16	1601021	• Connector, fluid, 1/4 NPS, AAA LT, Trilogy NES	1	

© 2013 Nordson Corporation
All rights reserved

Trilogy AAA-LT Manual Guns

Item	Part	Description	Quantity	Note
17	1601020	• Filter, fluid, AAA LT, Trilogy NES	1	
18	1601022	• Housing, filter, AAA LT, Trilogy NES	1	
19	1601018	• Tube, paint, AAA LT, Trilogy NES	1	
20	1601127	• Nut, fluid tube, AAA LT, Trilogy NES	1	
21	1601009	• Chamber, atomizing, AAA Trilogy NES	1	
22	1601001	• Nut, chamber, AAA, Trilogy NES	1	
23	1601017	• Cap, spring, AAA LT, Trilogy NES	1	
24	1600996	• Washer, small, needle, AAA, Trilogy NES	1	
25	------	• Spring, compression	1	B
26	1600995	• Washer, large, needle, AAA, Trilogy NES	1	
27	1601005	• Extension, needle, AAA, Trilogy NES	1	
28	1601004	• Carrier, needle, AAA, Trilogy NES	1	
29	1601003	• Gland, packing, AAA, Trilogy NES	1	
30	1601002	• Collar, gland, AAA, Trilogy NES	1	
31	1601011	• Seal, packing, AAA, Trilogy NES	1	
32	1600914	• Needle, AAA, Trilogy NES	1	B
33	------	• O-ring, 4.0 x 1.2 mm, Viton	4	A, B
34	------	• Seal, cup, inverted	3	A, B
35	------	• Screw, locking	1	B
36	------	• Spring, compression	1	B
37	------	• Valve, air	1	A, B
38	------	• Pin	1	B
39	------	• Seal, valve, packing gland	1	A, B
40	------	• Gland, packing, valve	1	B
41	1600868	• Washer, trigger lock, AAA, Trilogy NES	1	
42	1600999	• Lock, trigger, AAA, Trilogy NES	1	
43	1600957	• Screw, trigger lock, AAA, Trilogy NES	1	
44	1601019	• Support, fluid tube, AAA LT, Trilogy NES	1	
45	1601887	• Connector, straight, 1/2–20 JIC x 1/4 G	1	

NOTE A: Included in 1601014 Kit, seal, AAA, Trilogy NES. This kit is also included in 1601024 repair kit.

B: Included in 1601024 Kit, repair, AAA LT, Trilogy NES. This kit also includes 1601014 seal kit.

C: Refer to *Nozzles* list for additional nozzles.

D: NPT fitting used in USA; G used in Metric.

© 2013 Nordson Corporation
All rights reserved

This page intentionally left blank.

© 2013 Nordson Corporation
All rights reserved

Trilogy AAA Automatic Guns

Description

The Trilogy AAA automatic spray gun is a compact, lightweight gun that is ideal for a variety of liquid spray applications. The gun incorporates a variety of performance features, including separate air connections for atomizing air and spray pattern adjustments, offering more application versatility. Its modest size and weight make it ideal for fixed, robotic, and reciprocating applications.

The Trilogy AAA gun is also designed for ease of use, since the guns' packing cartridge can be externally adjusted for easy maintenance. The gun is available with a wide range of nozzles and can achieve pressures of up to 3625 psi (250 bar).



Automatic Gun

Features

- **Compact design –** saves valuable line space.
- **Consumes less air –** providing more efficient operation.
- **Stainless steel packing cartridge.**
- **Easy to operate and maintain –** packing cartridge is externally accessible.
- **Separate atomizing air and spray pattern control –** for a superior level of adjustment versatility.
- **Available in both U.S. and Metric versions.**

Specifications

Maximum material pressure	3625 psi (250 bar)
Recommended trigger air	50–85 psi (3.5–6.0 bar)
Air consumption @ 29 psi (2 bar)	3.4 cfm (97 l/min)
Nozzle diameter	0.009 to 0.031 in (0.23 to 0.78 mm)
Spraying angle	40° to 60°
Nozzle and needle	Stainless steel
Packing cartridge	Stainless steel
Dimensions (LxWxH)	6 x 3 x 3.5 in (150 x 75 x 90 mm)
Weight	1.5 lbs (670 g)

© 2013 Nordson Corporation
All rights reserved

Trilogy AAA Automatic Guns

Ordering Information

Part	Description	Note
	Trilogy Air Assist Airless (AAA-LT) Manual Gun	
1600769	Gun, automatic, NES, Trilogy AAA, U.S.	
1600801	Gun, automatic, NES, Trilogy AAA, metric	
	Kits	
1601043	Seal Kit	
1601044	Repair Kit	A
1600913	Air Cap	
1601026	Needle	
1601016	Retaining Ring	
	Nozzles	
1600878	0.013 in (0.33 mm), 50°	B
1600879	0.009 in (0.23 mm), 40°	
1600880	0.009 in (0.23 mm), 50°	
1600881	0.011 in (0.28 mm), 40°	
1600882	0.011 in (0.28 mm), 50°	
1600883	0.015 in (0.38 mm), 50°	
1600884	0.015 in (0.38 mm), 60°	
1600885	0.031 in (0.78 mm), 50°	
1600886	0.031 in (0.78 mm), 50°	

NOTE A: Repair kit includes the seal kit.
B: Supplied with gun.

© 2013 Nordson Corporation
All rights reserved

Trilogy AAA Automatic Gun Exploded View and Parts List

© 2013 Nordson Corporation
All rights reserved

Trilogy AAA Automatic Guns

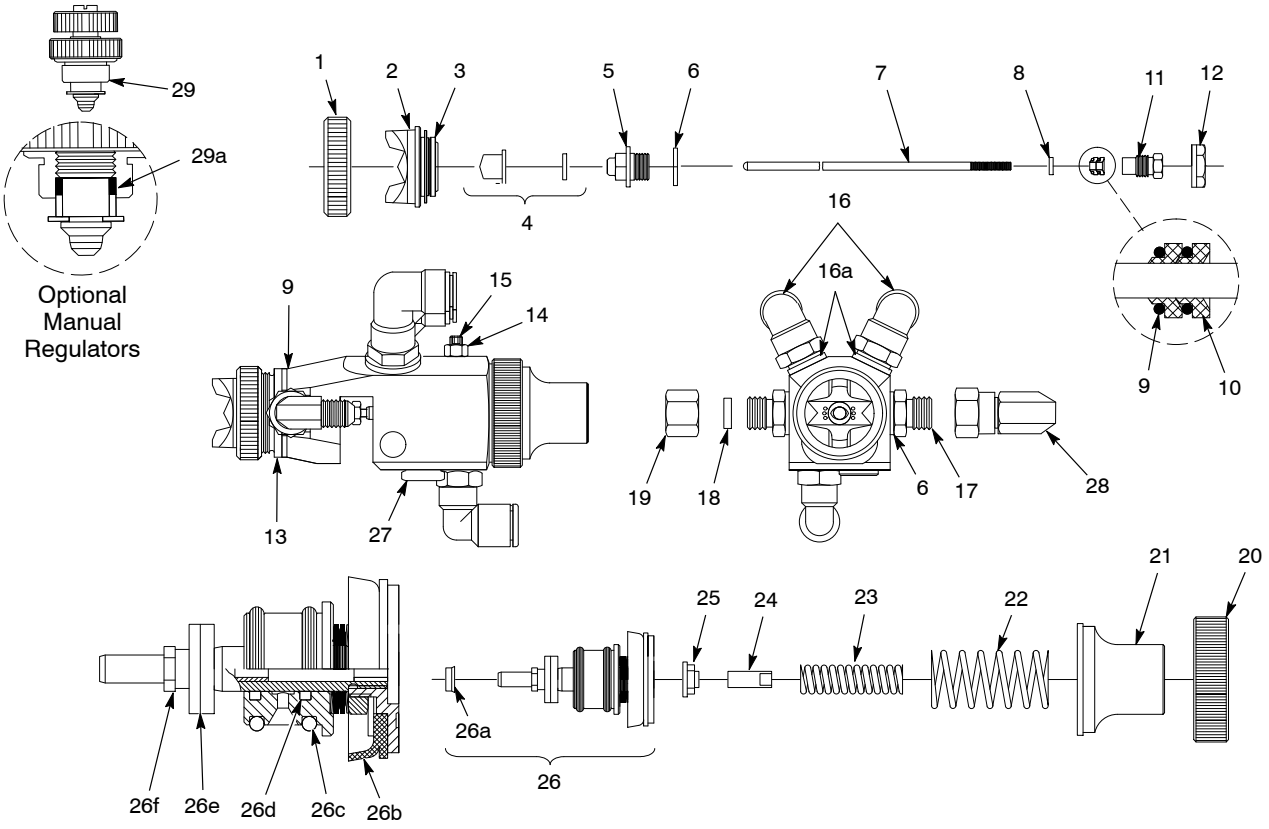

© 2013 Nordson Corporation
All rights reserved

Item	Part	Description	Quantity	Note
–	1600769	Gun, auto, NES, Trilogy AAA	1	
	1600801	Gun, auto, NES, Trilogy AAA, metric		
1	1601016	• Retainer, air cap, AAA LT/auto, Trilogy NES	1	
2	1600913	• Air cap, AAA, Trilogy NES	1	
3	1601028	• Seal, air cap, AAA auto, Trilogy NES	1	
4	1600878	• Nozzle, .33 mm, 50 degree, AAA, Trilogy NES	1	A
5	–––––––	• Screw, retaining, seal	1	C
6	–––––––	• Seal ring, aluminum	1	B, C
7	1601026	• Needle, AAA auto, Trilogy NES	1	
8	1601030	• Seal, gland, AAA auto, Trilogy NES	1	
9	1600847	• O-ring, 4.0 x 1.2, Viton, Trilogy NES	2	B, C
10	–––––––	• Seal, cup, inverted	2	C
11	1601027	• Gland, packing, AAA auto, Trilogy NES	1	
12	1601040	• Nut, chamber, auto, Trilogy NES	1	
13	1601034	• Chamber, atomizing, AAA auto, Trilogy NES	1	
14	–––––––	• Nut, hex, M5, DIN 934	1	
15	1601041	• Screw, retaining, auto, Trilogy NES	1	
16	972858	• Elbow, male, 3/8 tube x 1/8 NPT	2	D

Continued...

© 2013 Nordson Corporation
All rights reserved

Item	Part	Description	Quantity	Note
16	972276	• Connector, male, elbow, 8 mm tube x 1/8 uni	2	D
16a	1601822	• Insert, adapter, 1/8 NPT, Trilogy NES	2	D
16a	1601823	• Insert, adapter, 1/8 G, Trilogy NES	2	D
17	1601032	• Nipple, fld, M10 x 1/4 G, AAA auto, Trilogy NES	2	
18	------	• Seal	1	B, C
19	1601033	• Nut, cap, 1/4 G, AAA auto, Trilogy NES	1	
20	1601025	• Nut, spring retainer, AAA auto, Trilogy NES	1	
21	1601038	• Cap, spring, AAA auto, Trilogy NES	1	
22	1601039	• Spring, outer, AAA, auto, Trilogy NES	1	
23	1601029	• Spring, inner, AAA auto, Trilogy NES	1	
24	1601036	• Nut, guide, AAA auto, Trilogy NES	1	
25	1601035	• Nut, stop, AAA auto, Trilogy NES	1	
26	1601037	• Piston, complete, AAA auto, Trilogy NES	1	
26a	------	• • Ring, seal	1	B, C
26b	------	• • Gasket, piston	1	B, C
26c	------	• • O-ring, 16 x 2.0	2	B, C
26d	------	• • Ring, square	2	B, C
26e	------	• • Seal, take up, complete	1	B, C
26f	------	• • Nut, counter	1	C
27	1601824	• Plug, auto, Trilogy NES	1	
28	1601888	• Elbow, 1/2–20 JIC x 1/4 G, stainless steel	2	
NS	1600808	• Adapter, gun bar mount, Trilogy NES	1	
29	1601042	Regulator, air, auto, Trilogy NES	2	E
29a	------	• • Seal	1	B, C

NOTE A: Also available in additional sizes. Refer to the Nozzles list.

B: Included in 1601043 Kit, seal, AAA auto, Trilogy NES.

C: Included in 1601044 Kit, repair, AAA auto, Trilogy NES. Repair kit includes 1601043 seal kit.

D: If replacing, order correct thread size for your application.

E: Optional, order separately. Use to convert atomizing and fan pattern air from remote control to manual control.

© 2013 Nordson Corporation
All rights reserved

Trilogy AS and LVLP Manual Spray Guns

Description

The Trilogy air spray and LVLP guns are excellent all-purpose liquid spray guns with cost-to-performance ratio that makes them ideal for general manufacturing applications or as filler/primer guns. Providing application versatility, the guns are available in four versions – in either gravity or pressure/siphon feed models, which can be configured in an air spray version for reduced overspray, or in an LVLP version for minimum overspray.

All Trilogy air spray and LVLP models are equipped with an atomizing air regulating lever, a spray pattern adjustment knob, material flow regulator and an externally adjustable packing cartridge. As a result, gun maintenance and repair is easy for the operator.

Nozzles range in size from 0.04 to 0.08 in (1.0 to 2.0 mm). A standard ⅜" NPSM pot connection is provided in the pressure/siphon feed version. In addition, all Trilogy air spray and LVLP guns are equipped with a swivel air connection that rotates for ease of gun movement.

Designed with easy handling in mind, operators benefit from a balanced center of gravity and enhanced spray qualities to meet most any application need.



AS and LVLP Manual

Features and Benefits

- **Versatile configurations** – available in air spray and LVLP, gravity or pressure/siphon feed, to meet most any liquid application need.
- **Optimum center of gravity** – provides easy handling.
- **Rotating and swiveling air connection** – flexible handling allows easy gun movement.
- **Stainless steel nozzle and needle.**
- **Externally adjustable packing cartridge** – simplifies maintenance.
- **Available in U.S. and Metric versions.**

© 2013 Nordson Corporation
All rights reserved

Trilogy AS and LVLP Manual Spray Guns

Specifications

Trilogy AS Pressure/Siphon Feed	
Optimal spray pressure	28–36 psi (2.0–2.5 bar)
Air consumption @ 35 psi (2.5 bar)	3.4–8.0 cfm (96–226 l/min)
Nozzle/needle	Stainless steel
Weight without pot	1.05 lb (480 g)
Trilogy AS Gravity Feed	
Optimal spray pressure	28–36 psi (2.0–2.5 bar)
Air consumption @ 35 psi (2.5 bar)	3.9–8.2 cfm (110–232 l/min)
Nozzle/needle	Stainless steel
Weight without gravity cup	1.05 lb (480 g)

Trilogy LVLP Pressure/Siphon Feed	
Optimal spray pressure	28–36 psi (2.0–2.5 bar)
Air consumption @ 35 psi (2.5 bar)	3.6–8.7 cfm (103–246 l/min)
Nozzle/needle	Stainless steel
Weight without pot	1.05 lb (480 g)
Trilogy LVLP Gravity Feed	
Optimal spray pressure	28–36 psi (2.0–2.5 bar)
Air consumption @ 35 psi (2.5 bar)	4.2–8.7 cfm (120–246 l/min)
Nozzle/needle	Stainless steel
Weight without gravity cup	1.05 lb (480 g)

Ordering Information

Part	Description	Note
	Trilogy Air Spray Manual Spray Guns	
1600766	Gun, manual, NES, Trilogy, AS, U.S.	
1600798	Gun, manual, NES, Trilogy, AS, metric	
1600765	Gun, manual, NES, Trilogy, AS gravity, U.S.	
1600797	Gun, manual, NES, Trilogy, AS gravity, metric	
	Nozzle Kits (air cap, nozzle, needle, retaining nut and seals)	
1600968	0.04 in (1.0 mm)	A
1600969	0.06 in (1.5 mm)	
1600970	0.07 in (1.8 mm)	
1600971	0.08 in (2.0 mm)	
NOTE A: Supplied with gun.		

© 2013 Nordson Corporation
All rights reserved

Trilogy AS and LVLP Manual Spray Guns

Part	Description	Note
	Trilogy LVLP Manual Spray Guns	
1600768	Gun, manual, NES, Trilogy, LVLP, U.S.	
1600800	Gun, manual, NES, Trilogy, LVLP, metric	
1600767	Gun, manual, NES, Trilogy, LVLP gravity, U.S.	
1600799	Gun, manual, NES, Trilogy, LVLP gravity, metric	
	Nozzle Kits (air cap, nozzle, needle, retaining nut and seals)	
1600972	0.04 in (1.0 mm)	A
1600973	0.06 in (1.5 mm)	
1600974	0.07 in (1.8 mm)	
1600975	0.08 in (2.0 mm)	
NOTE A: Supplied with gun.		

Part	Description	Note
	Spare Parts Kits (for all versions)	
1600872	Seal kit	
1600873	Repair Kit	A
	Nylon Gravity Cup	
1600874	20 ounces (600 ml)	
1600875	4 ounces (125 ml)	
1601023	Filter – 0.009 in (0.23 mm); Qty=10	
1601031	Filter – 0.004 in (0.10 mm); Qty=10	
	Aluminum Siphon Cup	
1600876	34 ounces (1000 ml)	
NOTE A: Repair kit includes seal kit.		

© 2013 Nordson Corporation
All rights reserved

Trilogy AS and LVLP Pressure/Siphon Feed Gun Exploded View and Parts List

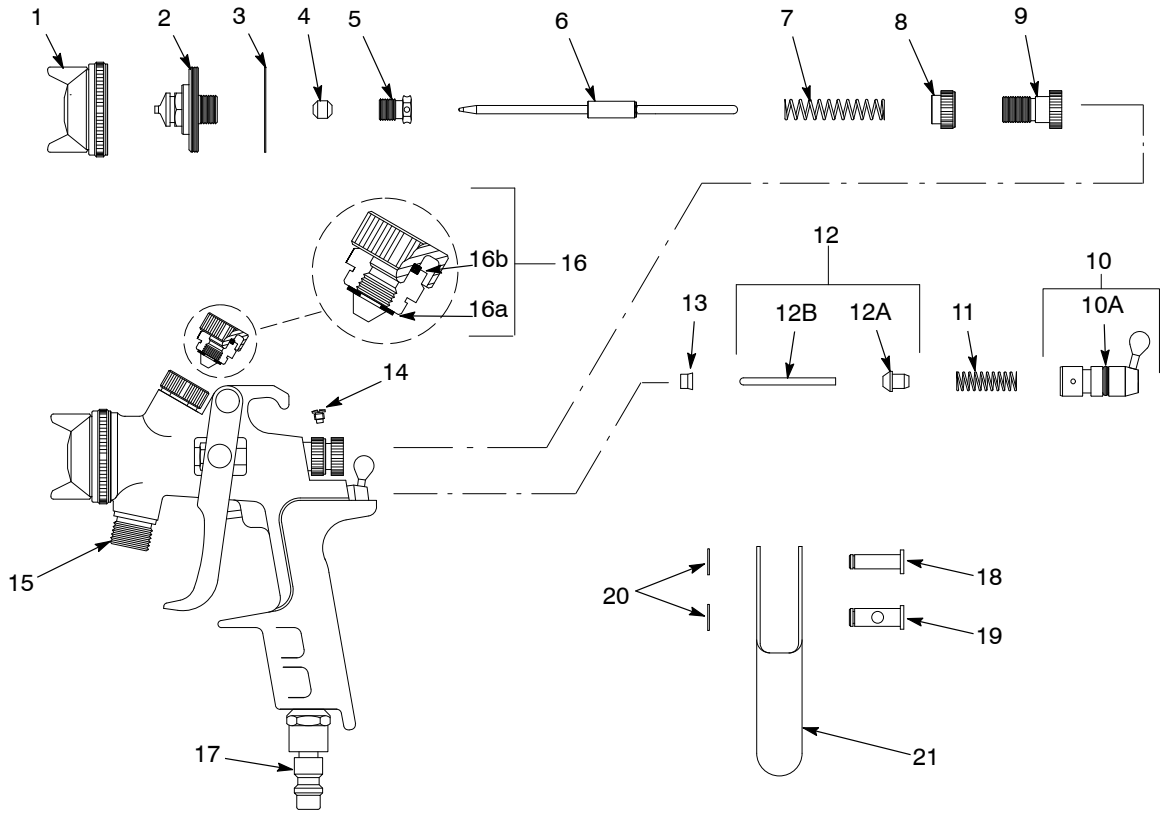

© 2013 Nordson Corporation
All rights reserved

Item	Part	Description	Quantity	Note
–	1600766	Gun, manual, NES, Trilogy AS	1	
	1600798	Gun, manual, NES, Trilogy AS, metric		
–	1600768	Gun, manual, NES, Trilogy LVLP	1	
–	1600800	Gun, manual, NES, Trilogy LVLP, metric		
1	1600926	• Air cap, 0.5–1.2 mm, AS G, Trilogy NES	1	A
1	1600929	• Air cap, 0.5–1.2 mm, LVLP, Trilogy NES	1	A
2	1600901	• Nozzle, 1.0 mm, AS, Trilogy NES	1	A
3	–––––––	• Seal	1	B, C
4	–––––––	• Seal, needle	1	B, C
5	–––––––	• Packing gland, needle	1	C
6	1600946	• Needle, 1.0 mm, AS, Trilogy NES	1	A
7	–––––––	• Spring, pressure	1	C
8	1600865	• Nut, lock, needle tension, AS, Trilogy NES	1	
9	1600866	• Screw, retaining, AS, Trilogy NES	1	
10	1600870	• Regulator, air, AS, Trilogy NES	1	
10A	–––––––	• • O–ring, 8.5 x 2	1	B, C
11	–––––––	• Spring, pressure	1	C
12	1600859	• Pin, valve, trigger air, Trilogy NES	1	
12A	–––––––	• • Valve, air	1	B, C
12B	–––––––	• • Pin, air valve	1	C
13	1600862	• Seal, air valve, AS, Trilogy NES	1	
14	1600863	• Screw, retaining, AS, Trilogy NES	1	
15	1600864	• Connector, pot, AS, Trilogy NES	1	
16	1600869	• Regulator, fan, AS, Trilogy NES	1	
16A	––––––––	• • Ring, retaining, external, 5 mm dia, DIN6799	1	
16B	–––––––	• • Seal	1	B, C
17	1600845	• Coupling, air, QC, swivel, US, Trilogy NES	1	A, D
17	1600844	• Coupling, air, QC, swivel, EU, Trilogy NES	1	A, E
17	1600846	• Coupling, air, QC, swivel, Asia, Trilogy NES		F
18	–––––––	• Axle, trigger	1	C
19	–––––––	• Pin, driver, trigger	1	C
20	––––––––	• Ring, retaining, external, 5 mm dia., DIN6799	2	
21	1600871	• Trigger, AS, Trilogy NES	1	
NS	1600876	• Pot, suction, 1000 ml, Trilogy NES	1	A

NOTE A: Also available in additional sizes and types. Refer to the Options list.

B: Included in 1600872 Kit, seal, AS, Trilogy NES (AS and LVLP seal kit).

C: Included in 1600873 Kit, repair, AS, Trilogy NES (As and LVLP repair kit).

D: Used on 1600765 and 1600767 guns.

E: Used on 1600797 and 1600799 metric guns.

F: Optional, not included with guns. Must be ordered separately.

© 2013 Nordson Corporation
All rights reserved

Trilogy AS and LVLP Gravity Feed Gun Exploded View and Parts List

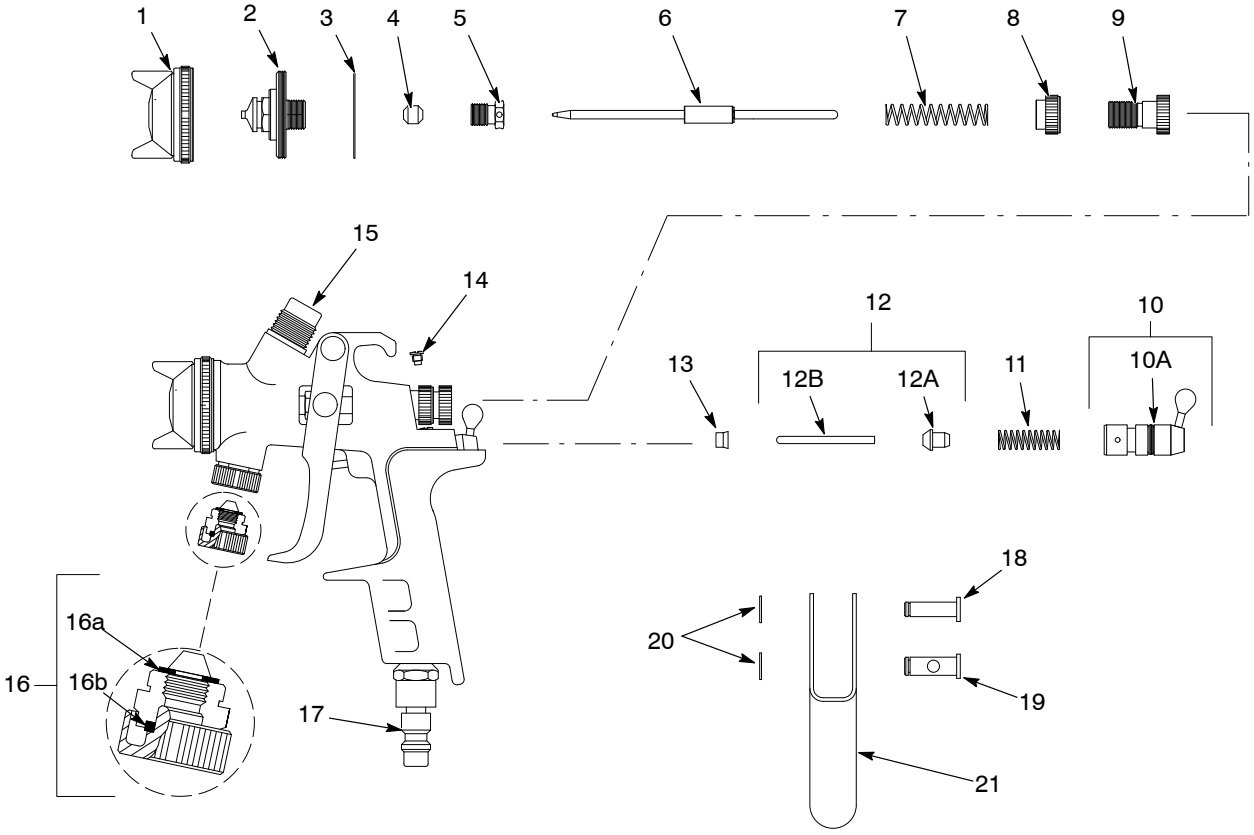

© 2013 Nordson Corporation
All rights reserved

Item	Part	Description	Quantity	Note
–	1600765	Gun, manual, NES, Trilogy AS, gravity	1	
	1600797	Gun, manual, NES, Trilogy AS, gravity, metric	1	
–	1600767	Gun, manual, NES, Trilogy LVLP, gravity	1	
–	1600799	Gun, manual, NES, Trilogy LVLP, gravity, metric	1	
1	1600926	• Air cap, 0.5–1.2 mm, AS, Trilogy NES	1	A
1	1600929	• Air cap, 0.5–1.2 mm, LVLP, AS, Trilogy NES	1	A
2	1600901	• Nozzle, 1.0 mm, AS, Trilogy NES	1	A
3	–––––––	• Seal	1	B, C
4	–––––––	• Seal, needle	1	B, C
5	–––––––	• Packing gland, needle	1	C
6	1600946	• Needle, 1.0 mm, AS, Trilogy NES	1	A
7	–––––––	• Spring, pressure	1	C
8	1600865	• Nut, lock, needle tension, AS, Trilogy NES	1	
9	1600866	• Screw, retaining, AS, Trilogy NES	1	
10	1600870	• Regulator, air, AS, Trilogy NES	1	
10A	–––––––	• • O–ring, 8.5 x 2	1	B, C
11	–––––––	• Spring, pressure	1	C
12	1600859	• Pin, valve, trigger air, Trilogy NES	1	
12A	–––––––	• • Valve, air	1	B, C
12B	–––––––	• • Pin, air valve	1	C
13	1600862	• Seal, air valve, AS, Trilogy NES	1	
14	1600863	• Screw, retaining, AS, Trilogy NES	1	
15	1600858	• Fitting, cup, Trilogy NES	1	
16	1600869	• Regulator, fan, AS, Trilogy NES	1	
16A	––––––––	• • Ring, retaining, external, 5 mm dia, DIN6799	1	
16B	–––––––	• • Seal	1	B, C
17	1600845	• Coupling, air, QC, swivel, US, Trilogy NES	1	A, D
17	1600844	• Coupling, air, QC, swivel, EU, Trilogy NES	1	A, E
17	1600846	• Coupling, air, QC, swivel, Asia, Trilogy NES		F
18	–––––––	• Axle, trigger	1	C
19	–––––––	• Pin, driver, trigger	1	C
20	––––––––	• Ring, retaining, external, 5 mm dia., DIN6799	2	
21	1600871	• Trigger, AS, Trilogy NES	1	
NS	1600874	• Cup, gravity, nylon, 600 ml, Trilogy NES	1	A

NOTE A: Also available in additional sizes and types. Refer to the Options list.

B: Included in 1600872 Kit, seal, AS, Trilogy NES (AS and LVLP seal kit).

C: Included in 1600873 Kit, repair, AS, Trilogy NES (AS and LVLP repair kit).

D: Used on 1600765 and 1600767 guns.

E: Used on 1600797 and 1600799 metric guns.

F: Optional, not included with guns. Must be ordered separately.

© 2013 Nordson Corporation
All rights reserved

This page intentionally left blank.

© 2013 Nordson Corporation
All rights reserved

Trilogy GP Manual Spray Guns

Description

The Trilogy GP gun combines excellent finish quality and ease-of-use for a wide range of industrial applications. Designed with versatility in mind, the gun is available in air spray and LVLP versions. It can also be converted from air spray to LVLP or vice versa with just a quick exchange of the atomization air cap – no need to change the nozzle or gun.

In addition, Quick-Clip technology provides fast, easy removal and installation of the needle without changing the gun settings. The air cap can be easily adjusted with a ¼ turn of its retaining ring. In addition, the gun can achieve variable spray pattern regulation with only a ¾ turn for fast, reproducible adjustment of the spray pattern.

Highly durable, the Trilogy GP spray gun's nozzle and needle are made from stainless steel, with a externally adjustable PTFE packing cartridge. With a lightweight, well-balanced design, the Trilogy GP gun is ergonomically friendly and makes the operator's job easier.

Features and Benefits

- **Excellent atomization –** provides outstanding finish quality.
- **Versatile and easy to use –** both air spray and LVLP can be achieved in a single gun.
- **Quick-Clip technology** – allows fast, easy removal and installation of the needle without affecting the gun settings.
- **Variable material, air volume and spray pattern regulation –** for a variety of industrial application needs.
- **Fast exchange and adjustment of air cap –** with a ¼ turn of the retaining ring.
- **Ergonomically designed –** for ease of operator use.



GP Manual Spray Guns

Specifications

Trilogy GP Air Spray Gravity Feed	
Optimal spray pressure	28–36 psi (2.0–2.5 bar)
Air consumption @ 35 psi (2.5 bar)	6.1 – 9.8 cfm (172 – 277 l/min)
Nozzle/needle	Stainless steel
Weight without gravity cup	1 lb (474 g)
Trilogy GP LVLP Spray Gravity Feed	
Optimal spray pressure	28–36 psi (2.0–2.5 bar)
Air consumption @ 35 psi (2.5 bar)	6.3 – 11 cfm (178 – 311 l/min)
Nozzle/needle	Stainless steel
Weight without gravity cup	1 lb (474 g)

© 2013 Nordson Corporation
All rights reserved

Trilogy GP Manual Spray Gun

Ordering Information

Part	Description	Note
	Trilogy GP Air Spray Manual Spray Guns	
1600762	Gun, manual, NES, Trilogy, GP-AS, U.S.	
1600794	Gun, manual, NES, Trilogy, GP-AS, metric	
	Nozzle Kits (air cap, nozzle, needle, retaining nut and seals)	
1600958	0.04 in (1.0 mm)	A
1601839	0.02 in (0.5 mm)	
1601840	0.03 in (0.8 mm)	
1601841	0.047 in (1.2 mm)	
1601842	0.051 in (1.3 mm)	
1601843	0.055 in (1.4 mm)	
1600960	0.059 in (1.5 mm)	
1601844	0.063 in (1.6 mm)	
1600962	0.071 in (1.8 mm)	
1600964	0.079 in (2.0 mm)	
1601845	0.098 in (2.5 mm)	
1601846	0.118 in (3.0 mm)	
NOTE A: Supplied with gun.		

© 2013 Nordson Corporation
All rights reserved

Trilogy GP Manual Spray Gun

Part	Description	Note
	Trilogy GP LVLP Manual Spray Guns	
1601125	Gun, manual, NES, Trilogy, GP-LVLP, U.S.	
1601126	Gun, manual, NES, Trilogy, GP-LVLP, metric	
	Nozzle Kits (air cap, nozzle, needle, retaining nut and seals)	
1600959	0.04 in (1.0 mm)	A
1601847	0.02 in (0.5 mm)	
1601848	0.03 in (0.8 mm)	
1601849	0.047 in (1.2 mm)	
1601850	0.051 in (1.3 mm)	
1601851	0.055 in (1.4 mm)	
1600961	0.059 in (1.5 mm)	
1601852	0.063 in (1.6 mm)	
1600963	0.071 in (1.8 mm)	
1600965	0.079 in (2.0 mm)	
1601853	0.098 in (2.5 mm)	
1601854	0.118 in (3.0 mm)	
NOTE A: Supplied with gun.		

Part	Description	Note
	Spare Parts Kits (for all versions)	
1600860	Seal kit	
1600861	Repair Kit	A
	Nylon Gravity Cup	
1600874	20 ounces (600 ml)	B
1600875	4 ounces (125 ml)	
1601023	Filter – 0.009 in (0.23 mm); Qty=10	
1601031	Filter – 0.004 in (0.10 mm); Qty=10	
NOTE A: Repair kit includes seal kit. B: Supplied with gravity feed gun.		

© 2013 Nordson Corporation
All rights reserved

Trilogy GP Manual Spray Gun Exploded View and Parts List

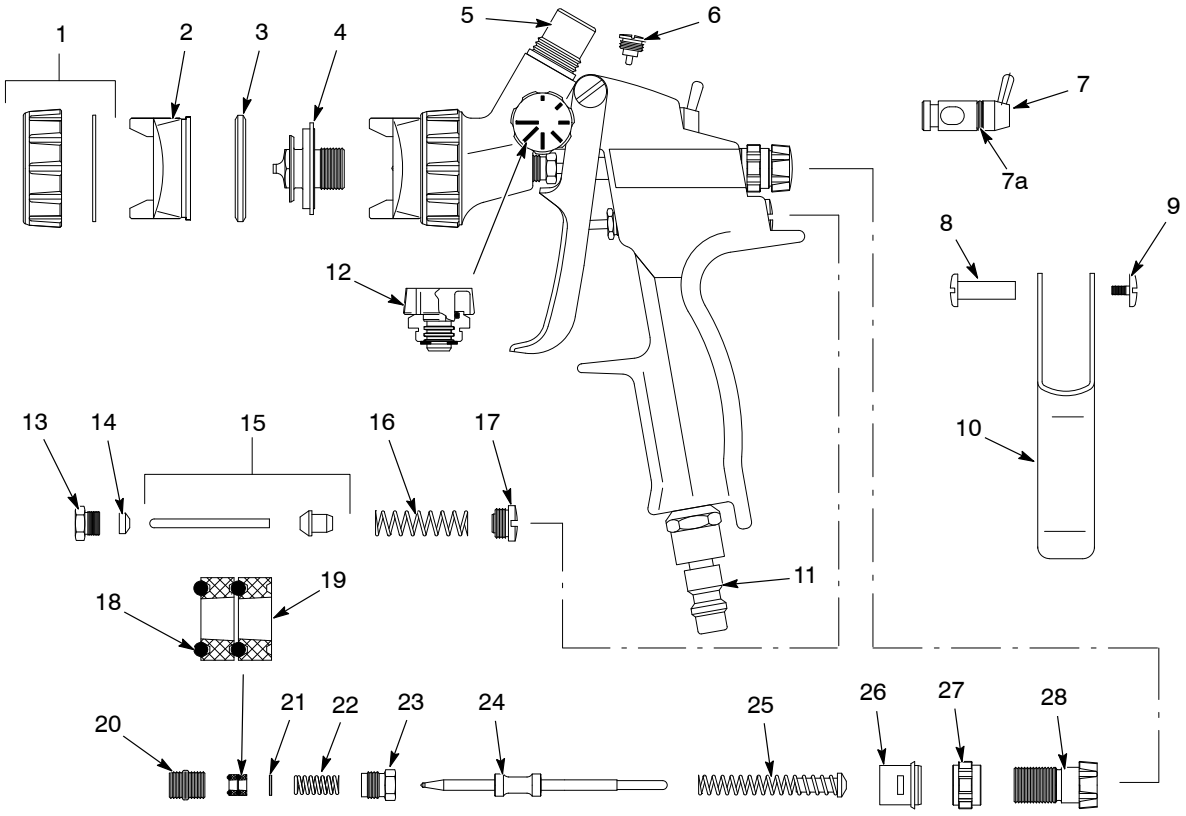

© 2013 Nordson Corporation
All rights reserved

Item	Part	Description	Quantity	Note
–	1600762	Gun, manual, NES, Trilogy GP-AS	1	
	1600794	Gun, manual, NES, Trilogy GP-AS, metric		
–	1601125	Gun, manual, NES, Trilogy GP-LVLP	1	
–	1601126	Gun, manual, NES, Trilogy GP-LVLP, metric		
1	1600855	• Retainer, w/seal, air cap, AC/GP, Trilogy NES	1	
2	1600916	• Air cap, 1.0 mm, GP, Trilogy NES	1	A
2	1600917	• Air cap, 1.0 mm, LVLP, GP, Trilogy NES	1	A
3	–––––––	• Seal	1	B, C
4	1600896	• Nozzle, 1.0 mm, GP, Trilogy NES	1	A
5	1600858	• Fitting, cup, Trilogy NES	1	
6	1600856	• Screw, retaining, AC/GP, Trilogy NES	1	
7	1600853	• Regulator, air, AC/GP, Trilogy NES	1	
7a	–––––––	• • O–ring, 7 x 1.5	1	B, C
8	–––––––	• Axle, trigger	1	C
9	–––––––	• Screw, trigger	1	C
10	1600848	• Trigger, AC/GP, Trilogy NES	1	
11	1600845	• Coupling, air, QC, swivel, US, Trilogy NES	1	A, D
11	1600844	• Coupling, air, QC, swivel, EU, Trilogy NES	1	A, E
11	1600846	• Coupling, air, QC, swivel, Asia, Trilogy NES		F
12	1600852	• Regulator, fan, AC/GP, Trilogy NES	1	
13	–––––––	• Gland, packing, air valve	1	C
14	–––––––	• Seal, packing gland, air valve	1	B, C
15	1600859	• Pin, valve, trigger air, Trilogy NES	1	
16	–––––––	• Spring, pressure	1	C
17	1600857	• Screw, retaining, valve, AC/GP, Trilogy NES	1	
18	–––––––	• O-ring, 4.0 x 1.2 mm, Viton	2	B, C
19	–––––––	• Seal	2	B, C
20	–––––––	• Guide, needle	1	B, C
21	–––––––	• Disc, pressure	1	C
22	–––––––	• Spring, pressure	1	C
23	–––––––	• Gland, packing, needle	1	C
24	1600942	• Needle, 1.0 mm, GP, Trilogy NES	1	
25	––––––––	• Bolt, distance, w/pressure spring	1	C
26	1600851	• Collar, retaining, QC, Trilogy NES	1	
27	1600849	• Nut, lock, quick clip, Trilogy NES	1	
28	1600850	• Screw, needle adjustment, QC, Trilogy NES	1	
NS	1600874	• Cup, gravity, nylon, 600 ml, Trilogy NES	1	A

NOTE A: Also available in additional sizes and types.

B: Included in 1600860 Kit, seal, AC/GP, Trilogy NES (AS and LVLP). Seal kit is also included in repair kit.

C: Included in 1600861 Kit, repair, AC/GP, Trilogy NES (AS and LVLP). Also includes seal kit.

D: Used on 1600762 and 1601125 guns.

E: Used on 1600794 and 1601126 metric guns.

F: Optional, not included with guns. Must be ordered separately.

© 2013 Nordson Corporation
All rights reserved

This page intentionally left blank.

© 2013 Nordson Corporation
All rights reserved

Trilogy AC Manual Spray Guns

Description

The Trilogy AC gun combines excellent finish quality and ease-of-use for a wide range of automotive applications. Designed with versatility in mind, the gun can be converted from air spray to LVLP or vice versa with just a quick exchange of the air cap – no need to change the nozzle or gun.

In addition, Quick–Clip technology provides fast, easy removal and installation of the needle without changing the gun settings. The air cap can be easily adjusted with a ¼ turn of its retaining ring. In addition, the gun can achieve variable spray pattern regulation with only a ¾ turn for fast, reproducible adjustment of spray pattern.

Highly durable, the Trilogy AC spray gun's nozzle and needle are made from stainless steel, with a externally adjustable PTFE packing cartridge. With a lightweight, well-balanced design, the Trilogy AC gun is ergonomically friendly and makes the operator's job easier.



AC Manual Spray Guns

Features and Benefits

- **Excellent atomization** – provides outstanding finish quality.
- **Versatile and easy to use** – both air spray and LVLP can be achieved in a single gun.
- **Quick-Clip technology** – allows fast, easy removal and installation of the needle without affecting the gun settings.
- **Variable material, air volume and spray pattern regulation** – for a variety of automotive application needs.
- **Fast exchange and adjustment of air cap** – with a ¼ turn of the retaining ring.
- **Ergonomically designed** – for ease of operator use.

Specifications

Trilogy AC Air Spray Gravity Feed	
Optimal spray pressure	28–36 psi (2.0–2.5 bar)
Air consumption @ 35 psi (2.5 bar)	6.1 – 9.8 cfm (172 – 277 l/min)
Nozzle/needle	Stainless steel
Weight without gravity cup	1 lb (474 g)
Trilogy AC LVLP Spray Gravity Feed	
Optimal spray pressure	28–36 psi (2.0–2.5 bar)
Air consumption @ 35 psi (2.5 bar)	6.3 – 11 cfm (178 – 311 l/min)
Nozzle/needle	Stainless steel
Weight without gravity cup	1 lb (474 g)

© 2013 Nordson Corporation
All rights reserved

Trilogy AC Manual Spray Guns

Ordering Information

Part	Description	Note
	Trilogy AC Air Spray Manual Spray Guns	
1600763 1600795	Gun, manual, NES, Trilogy, AC-AS, U.S. Gun, manual, NES, Trilogy, AC-AS, metric	
	Nozzle Kits (air cap, nozzle, needle, retaining nut and seals)	
1601835 1600966 1601837	0.047 in (1.2 mm) 0.051 in (1.3 mm) 0.055 in (1.4 mm)	A
NOTE A: Supplied with gun.		

Part	Description	Note
	Trilogy AC LVLP Manual Spray Guns	
1601130 1601131	Gun, manual, NES, Trilogy, AC-LVLP, U.S. Gun, manual, NES, Trilogy, AC-LVLP, metric	
	Nozzle Kits (air cap, nozzle, needle, retaining nut and seals)	
1601836 1600967 1601838	0.047 in (1.2 mm) 0.051 in (1.3 mm) 0.055 in (1.4 mm)	A
NOTE A: Supplied with gun.		

Part	Description	Note
	Spare Parts Kits (for all versions)	
1600860 1600861	Seal kit Repair Kit	A
	Small Nylon Gravity Cup	
1600874 1600875 1601023 1601031	20 ounces (600 ml) 4 ounces (125 ml) Filter – 0.009 in (0.23 mm); Qty=10 Filter – 0.004 in (0.10 mm); Qty=10	B
NOTE A: Repair kit includes seal kit. B: Supplied with gravity feed gun.		

© 2013 Nordson Corporation
All rights reserved

Trilogy AC Manual Spray Gun Exploded View and Parts List

© 2013 Nordson Corporation
All rights reserved

Trilogy AC Manual Spray Guns

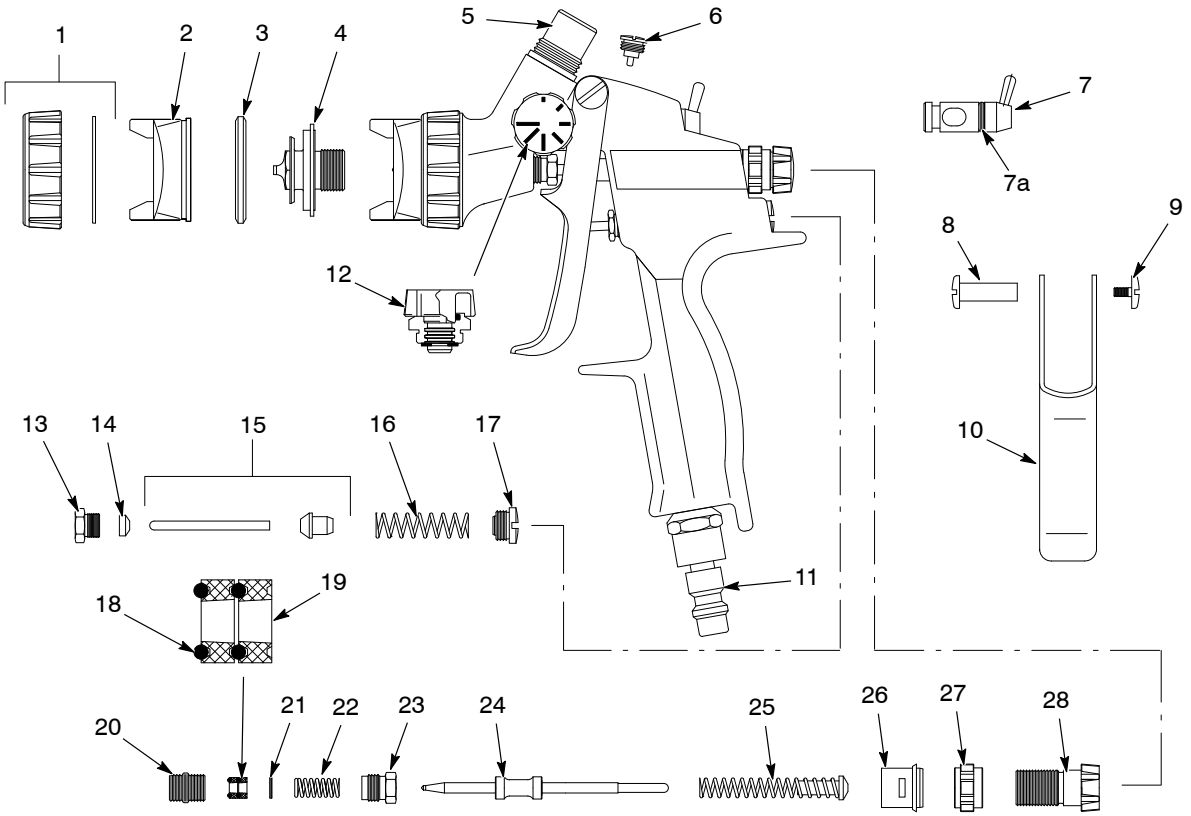

© 2013 Nordson Corporation
All rights reserved

Item	Part	Description	Quantity	Note
–	1600763	Gun, manual, NES, Trilogy AC-AS	1	
	1600795	Gun, manual, NES, Trilogy AC-AS, metric	1	
–	1601130	Gun, manual, NES, Trilogy AC-LVLP	1	
–	1601131	Gun, manual, NES, Trilogy AC-LVLP, metric	1	
1	1600855	• Retainer, w/seal, air cap, AC/GP, Trilogy NES	1	
2	1600924	• Air cap, 1.3 mm, AC, Trilogy NES	1	
2	1600925	• Air cap, 1.3 mm, LVLP, AC, Trilogy NES	1	
3	–––––––	• Seal	1	A, B
4	1600900	• Nozzle, 1.3 mm, GP, Trilogy NES	1	
5	1600858	• Fitting, cup, Trilogy NES	1	
6	1600856	• Screw, retaining, AC/GP, Trilogy NES	1	
7	1600853	• Regulator, air, AC/GP, Trilogy NES	1	
7a	–––––––	• • O–ring, 7 x 1.5	1	A, B
8	–––––––	• Axle, trigger	1	B
9	–––––––	• Screw, trigger	1	B
10	1600848	• Trigger, AC/GP, Trilogy NES	1	
11	1600845	• Coupling, air, QC, swivel, US, Trilogy NES	1	C
11	1600844	• Coupling, air, QC, swivel, EU, Trilogy NES	1	D
11	1600846	• Coupling, air, QC, swivel, Asia, Trilogy NES		E
12	1601132	• Regulator, fan, gage, AC, Trilogy NES	1	
13	–––––––	• Gland, packing, air valve	1	B
14	–––––––	• Seal, packing gland, air valve	1	A, B
15	1600859	• Pin, valve, trigger air, Trilogy NES	1	
16	–––––––	• Spring, pressure	1	B
17	1600857	• Screw, retaining, valve, AC/GP, Trilogy NES	1	
18	–––––––	• O-ring, 4.0 x 1.2 mm, Viton	2	A, B
19	–––––––	• Seal	2	A, B
20	–––––––	• Guide, needle	1	A, B
21	–––––––	• Disc, pressure	1	B
22	–––––––	• Spring, pressure	1	B
23	–––––––	• Gland, packing, needle	1	B
24	1600915	• Needle, 1.3 mm, GP, Trilogy NES	1	
25	––––––––	• Bolt, distance, w/pressure spring	1	B
26	1600851	• Collar, retaining, QC, Trilogy NES	1	
27	1600849	• Nut, lock, quick clip, Trilogy NES	1	
28	1600850	• Screw, needle adjustment, QC, Trilogy NES	1	
NS	1600874	• Cup, gravity, nylon, 600 ml, Trilogy NES	1	F

NOTE A: Included in 1600860 Kit, seal, AS, Trilogy NES (AS and LVLP seal kit). Seal kit also included in repair kit.

B: Included in 1600861 Kit, repair, AS, Trilogy NES (AS and LVLP repair kit). Repair kit also includes seal kit.

C: Used on 1600763 and 1601130 guns.

D: Used on 1600795 and 1601131 metric guns.

E: Optional, not included with gun. Must be ordered separately.

F: Also available in additional sizes and types.

© 2013 Nordson Corporation
All rights reserved

This page intentionally left blank.

© 2013 Nordson Corporation
All rights reserved

Trilogy AS, LP, and QC Automatic

Description

The Trilogy AS, LP, and QC automatic guns combine excellent finish quality and ease-of-use for a wide range of applications. Designed with versatility in mind, the guns are available in air spray and LP versions. The Trilogy QC gun provides a quick change console that incorporates a quick-lock feature, making it easy to remove the spray gun when needed.

All three Trilogy automatic spray guns incorporate a variety of performance features, including separate air connections for atomizing air and spray pattern adjustment, providing more application versatility. The modest size and weight make them ideal for fixed, robotics and reciprocating applications. Highly durable, the Trilogy AS, LP, and QC spray guns' nozzle and needle are made from stainless steel, with PTFE packing cartridge.

The guns are also designed for ease of use, since the packing cartridge can be externally adjusted for easy maintenance. They are available in a wide range of nozzles and can accept pressure of up to 85 psi (6 bar).



AS and LP Automatic Spray Guns

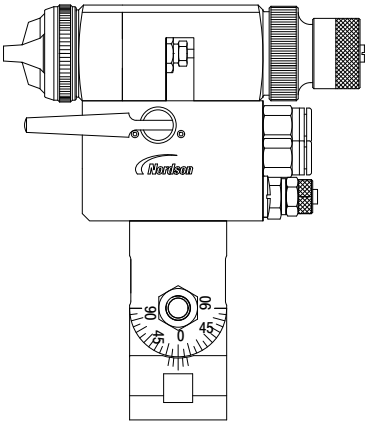

QC Automatic Spray Guns

Features and Benefits

- **Excellent atomization** – provides outstanding finish quality.
- **Separate atomizing air and spray pattern control** – for a superior level of adjustment versatility.
- **Easy to operate and maintain** – needle packing cartridge is externally accessible.
- **Trilogy QC features a quick change console** – for easy removal of the spray gun.
- **Available in both U.S. and Metric versions.**

© 2013 Nordson Corporation
All rights reserved

Trilogy AS, LP, and QC Automatic

Specifications

	Trilogy AS	Trilogy LP	Trilogy QC
Maximum material pressure	85 psi (6 bar)		
Maximum material temperature	140° F (60° C)		
Maximum air pressure	116 psi (8 bar)		
Air consumption	8.5–9.5 cfm (240–270 l/min)	9.2–10.7 cfm (260–305 l/min)	8.5–9.5 cfm (240–270 l/min)
Recommended atomizing air pressure	36 psi (2.5 bar)		
Recommended trigger air pressure	50–85 psi (3.5–6.0 bar)		
Fluid fitting	⅜ in NPSM (¼ in G)	⅜ in NPSM (¼ in G)	⅜ in tube (8 mm tube)
Atomizing air fiting	⅜ in tube (8 mm tube)		
Trigger air fitting	¼ in tube (8 mm tube)		
Nozzle diameter (standard)	0.039 in (1.0 mm)		
Dimensions	6 x 3 x 3 in (160 x 72 x 75 mm)		
Weight	1 lb, 14 oz (850 g)		

© 2013 Nordson Corporation
All rights reserved

Ordering Information

Nozzle Kits (air cap, nozzle, needle, and seals)

Part	Part	Part	Description	Note
Trilogy AS	Trilogy LP	Trilogy QC	Nozzle Kit	
1601903	1601855	1601863	0.020 in (0.5 mm)	
1601904	1601856	1601864	0.031 in (0.8 mm)	
1601905	1600976	1600980	0.039 in (1.0 mm)	
1601906	1601857	1601865	0.047 in (1.2 mm)	
1601907	1601858	1601866	0.051 in (1.3 mm)	
1601908	1601859	1601867	0.055 in (1.4 mm)	
1601909	1600977	1600981	0.059 in (1.5 mm)	
1601910	1601860	1601868	0.063 in (1.6 mm)	
1601911	1600978	1600982	0.071 in (1.8 mm)	
1601912	1600979	1600983	0.079 in (2.0 mm)	
1601913	1601861	1601869	0.098 in (2.5 mm)	
1601914	1601862	1601870	0.118 in (3.0 mm)	

Spare Part Kits

Part	Description	Note
	Spare Parts Kits (for AS and LP)	
1601049	Seal kit	
1601050	Repair kit	A
NOTE A: Repair kit includes seal kit.		

© 2013 Nordson Corporation
All rights reserved

Trilogy AS and LP Automatic Spray Gun Exploded View and Parts List

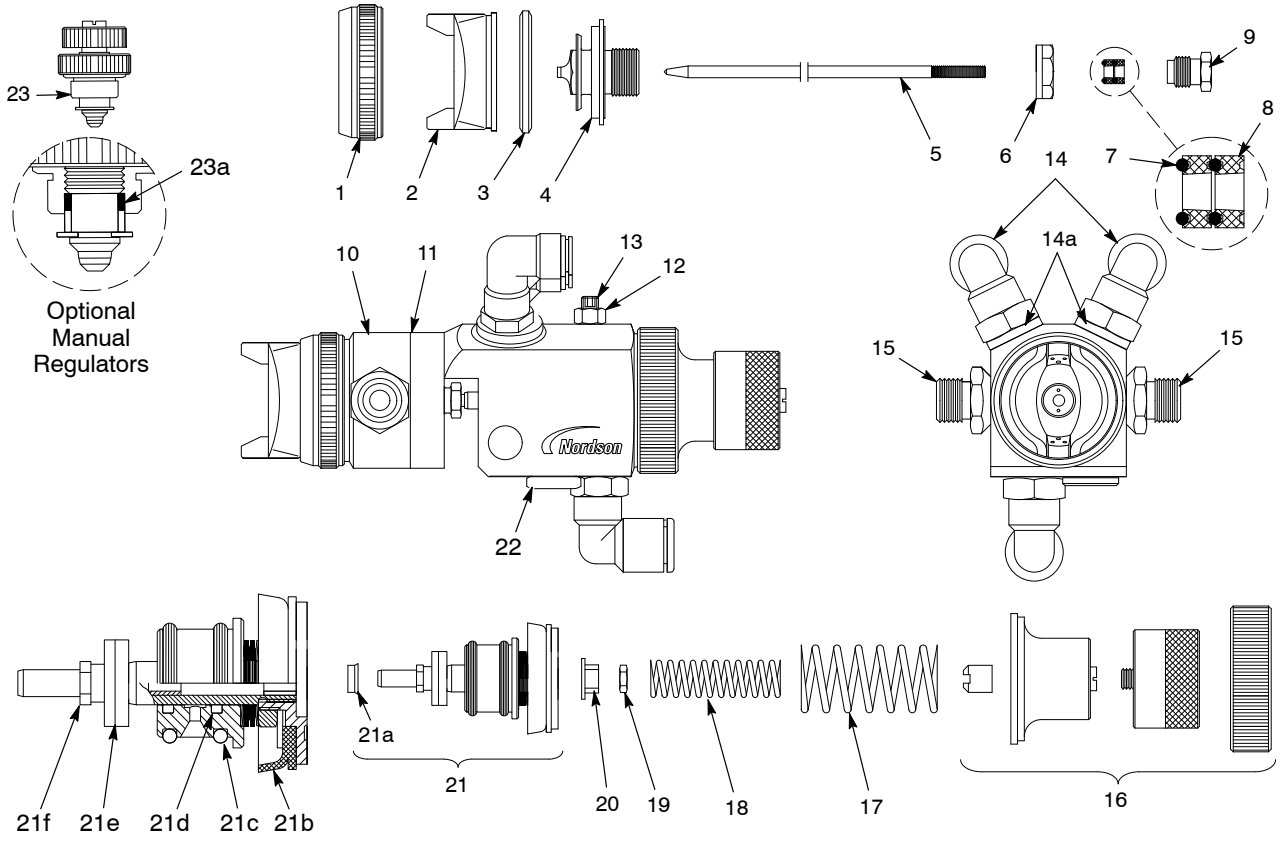

© 2013 Nordson Corporation
All rights reserved

Item	Part	Description	Quantity	Note
–	1600770	Gun, auto, NES, Trilogy LP	1	
–	1600802	Gun, auto, NES, Trilogy LP, metric	1	
–	1601873	Gun, auto, NES, Trilogy AS	1	
–	1601874	Gun, auto, NES, Trilogy AS metric	1	
1	1601045	• Retainer, air cap, LP, Trilogy NES	1	
2	1600932	• Air cap, 0.5–1.2 mm, LP, Trilogy NES	1	
2	1600935	• Air cap, 0.5–1.2 mm, AS auto, Trilogy NES	1	
3	–––––––	• Seal, air cap	1	B, C
4	1600905	• Nozzle, 1.0 mm, LP, Trilogy NES	1	A
5	1600950	• Needle, 1.0 mm, LP, Trilogy NES	1	
6	1601040	• Nut, chamber, auto, Trilogy NES	1	
7	–––––––	• O-ring, 4.0 x 1.2, Viton, Trilogy NES	2	B, C
8	–––––––	• Seal	2	B, C
9	–––––––	• Gland, packing	1	C
10	1601046	• Chamber, atomizing, LP, Trilogy NES	1	
11	–––––––	• Seal	2	B, C
12	–––––––	• Nut, hex, M5, DIN 934	1	
13	1601041	• Screw, retaining, auto, Trilogy NES	1	
14	972858	• Elbow, male, 3/8 tube x 1/8 NPT	2	D
14	1093011	• Connector, female, elbow, 8 mm tube x 1/8 RPT	2	D
14a	1601822	• Insert, adapter, 1/8 NPT, Trilogy NES	2	D
14a	1601823	• Insert, adapter, 1/8 G, Trilogy NES	2	D
15	1600939	• Connector, nipple,1/4 G, Trilogy NES	2	
16	1601047	• Cap, spring adjust, LP, Trilogy NES	1	
17	–––––––	• Spring, compression	1	C
18	–––––––	• Spring, compression	1	C
19	–––––––	• Nut, hex, M3.5	1	C
20	–––––––	• Nut, stroke, pre-air	1	C
21	1601048	• Piston, complete, LP, Trilogy NES	1	
21a	–––––––	• • Ring, seal	1	B, C
21b	–––––––	• • Gasket, piston	1	B, C
21c	–––––––	• • O-ring, 16 x 2.0	2	B, C
21d	–––––––	• • Ring, square	2	B, C
21e	–––––––	• • Seal, take up, complete	1	B, C
211f	–––––––	• • Nut, jam	1	B, C
22	1601824	• Plug, auto, Trilogy NES	1	
NS	1600808	• Adapter, gun bar mount, Trilogy NES	1	
23	1601042	Regulator, air, auto, Trilogy NES	2	E
23a	–––––––	• Seal	1	B, C

NOTE A: Also available in additional sizes.

B: Included in 1601049 Kit, seal, LP, Trilogy NES.

C: Included in 1601050 Kit, repair, LP, Trilogy NES. This kit also includes the 1601049 seal kit.

D: If replacing, order correct size for your application.

E: Optional, must be ordered separately. Use to convert atomizing and fan pattern air from remote control to manual control.

© 2013 Nordson Corporation
All rights reserved

Trilogy QC Automatic Spray Gun Exploded View and Parts List

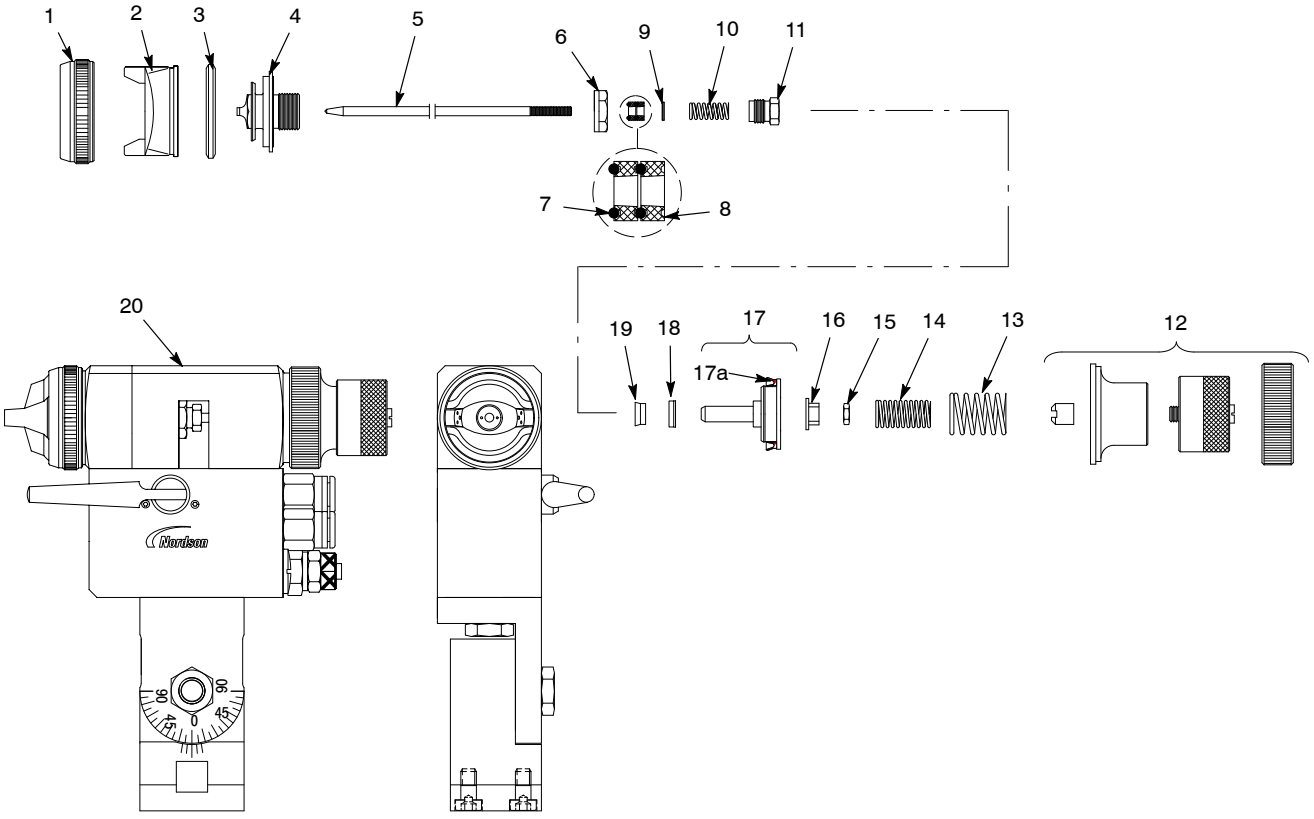

© 2013 Nordson Corporation
All rights reserved

Item	Part	Description	Quantity	Note
–	1600771	Gun, auto, NES, Trilogy LP, QC	1	
	1600803	Gun, auto, NES, Trilogy LP, QC, metric		
1	1601045	• Retainer, air cap, LP, Trilogy NES	1	
2	1600935	• Air cap, 0.5–1.2 mm, LP QC, Trilogy NES	1	
3	1601114	• Seal, air cap, Trilogy NES	1	
4	1600905	• Nozzle, 1.0 mm, LP, Trilogy NES	1	
5	1600954	• Needle, 1.0 mm, LP QC, Trilogy NES	1	
6	1601040	• Nut, chamber, auto, Trilogy NES	1	
7	1600847	• O-ring, 4.0 x 1.2, Viton, Trilogy NES	2	
8	1600877	• Seal, packing gland, Trilogy NES	2	
9	1600910	• Disc, gland LP QC, Trilogy NES	1	
10	1600911	• Spring, LP QC, Trilogy NES	1	
11	1600909	• Gland, packing, LP QC, Trilogy NES	1	
12	1601121	• Assembly, cap, LP QC, Trilogy NES	1	
13	1601123	• Spring, outer, LP QC, Trilogy NES	1	
14	1601122	• Spring, inner, LP QC, Trilogy NES	1	
15	1601117	• Nut, jamb, piston, Trilogy NES	1	
16	1601116	• Nut, piston, Trilogy NES	1	
17	1600912	• Assembly, piston, LP QC, Trilogy NES	1	
17a	1601118	• • Collar, piston, LP QC, Trilogy NES	1	
18	1601119	• Seal, piston, LP QC, Trilogy NES	1	
19	1601120	• Ring, seal, LP QC, Trilogy NES	1	
20	1601115	• Seal, chamber, Trilogy NES	2	

© 2013 Nordson Corporation
All rights reserved

This page intentionally left blank.

© 2013 Nordson Corporation
All rights reserved

A4B Manual Airless Spray Gun

Description

The Nordson Model A4B manual airless spray gun is lightweight and rugged. The gun is available in a non-circulating version for cold airless painting and a circulating version for use in high-performance heated airless painting. Stainless steel models are available for corrosive materials or waterborne applications.

The standard A4B gun is equipped with swivel-type, high-pressure fluid fittings. The forward position of the fluid inlet, lightweight construction, and easy triggering assure greater mobility and control. The trigger lock and integral fluid diffuser provide maximum operating safety. The minimal wear parts can be replaced in minutes without special tools, minimizing production downtime and repair costs.

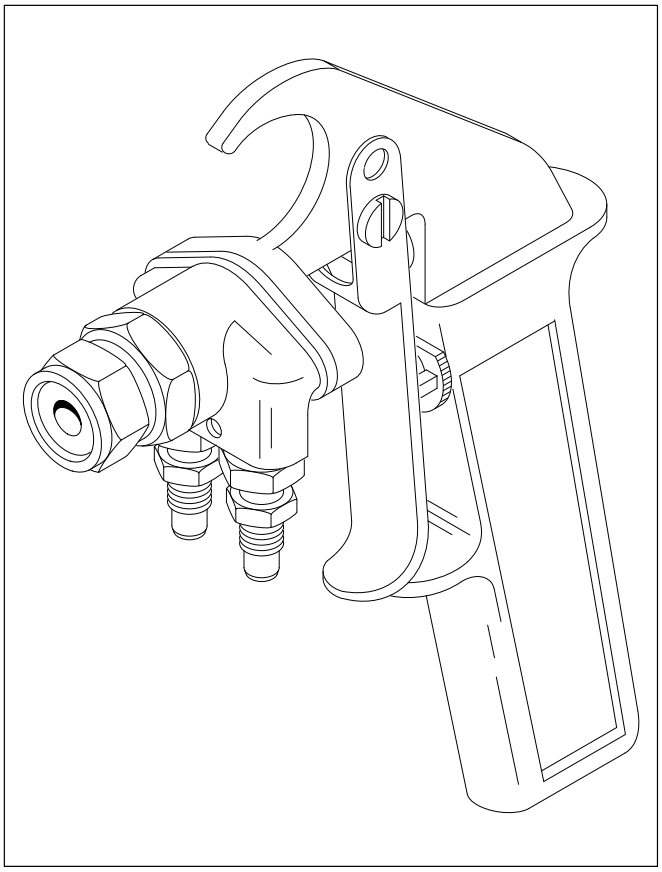

Features

- Non-circulating or circulating versions
- Available in lightweight, durable, forged-aluminum body or 316 stainless steel
- Forward-position swivel fluid inlet on standard guns for balance and maneuverability
- Responsive, easy-pull trigger
- Interchangeable internal parts
- Trigger lock
- Trigger guard and safety shut-off available
- Includes a retaining nut for standard flange-mount nozzles

© 2013 Nordson Corporation
All rights reserved

A4B Manual Airless Spray Gun

Specifications

Dimensions, cm (in.)	
Length	15.8 (6.25)
Height	17.1 (6.75)
Width	4.41 (1.75)
Weight, kg (oz)	
Non-circulating	0.45 (16)
Circulating	0.57 (20)
Fittings	
Standard	$^1/_2$-20 JIC, swivel
Stainless steel	$^1/_2$-20 JIC, stainless steel rigid
Maximum Operating Pressure, bar (psi)	
Standard	207 (3000)
Stainless steel	103 (1500)

© 2013 Nordson Corporation
All rights reserved

A4B Manual Airless Spray Gun

Ordering Information

Part	Description	Note
	Standard Circulating Models	A
152200	Standard swivel gun	
152480	316 stainless steel gun, with rigid fitting	
	Standard Non-Circulating Models	B
152320	Standard swivel gun	
152450	316 stainless steel gun	
	Kits	
106299	Non-circulating head	
106368	Trigger, new style (post-1983), 3.145-in. long	
152283	Handle	
106252	Rebuild (includes needle and packing cartridge)	
106223	Airless hand gun seal	
	Accessories	C
828042	Nylon hose, $^{3}/_{16}$-ID, 0.188 x 42, spring guard	
972350	Hose-to-hose straight connector, steel, zinc-plated for $^{3}/_{16}$-in. and $^{1}/_{4}$-in hose	

NOTE A: Unless otherwise indicated circulating models have $^{1}/_{2}$-20-JIC fittings for $^{3}/_{16}$-in. and $^{1}/_{4}$-in. ID dual hose.

B: Unless otherwise indicated non-circulating models have $^{1}/_{2}$-20-JIC fittings for $^{3}/_{16}$-in. and $^{1}/_{4}$-in. ID hose.

C: When more flexibility is needed, order one or two whip hoses and the connector to connect to the longer feed hose.

© 2013 Nordson Corporation
All rights reserved

© 2013 Nordson Corporation
All rights reserved

A7A Automatic Airless Spray Gun

Description

The Nordson Model A7A gun is an automatic, compact, high-cycle, airless spray gun. The A7A gun sprays solventborne or waterborne coatings and can be used in a wide variety of applications. The standard gun is constructed of aluminum and steel. The stainless steel gun is available for use with corrosive and waterborne materials and for other special applications. The A7A gun is solenoid-actuated and air-operated.

Because of the fast trigger-cycle capability, the A7A gun can be used for ultra high-speed applications as well as general product finishing. Its simple design and rugged construction provide for long service life and easy field maintenance. Several repair kits are available to reduce downtime.

The A7A gun is available in single-chamber, dual-chamber, dual chamber angled, and quattro models. The dual-chamber model permits the user to quickly switch between two different coatings with no downtime. A retrofit kit is available to convert the two single-chamber A7A guns to the one dual-chamber model.

Features

- Constructed of either aluminum or stainless steel
- Fast triggering capability
- Simple maintenance
- Rugged design
- Long lasting elastomer seals
- Used for general finishing applications and very high-speed applications
- Extended service life
- Extended nozzle versions for coating recessed areas
- Optional high-pressure 207 bar (3000 psi) and air cylinder detent kits available
- Includes a retaining nut for standard flange-mount nozzles
- Mounts to a $^1/_2$-in. round bar

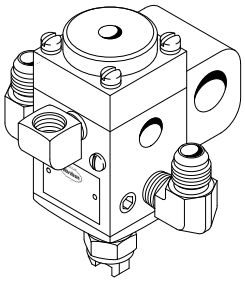

Single-chamber

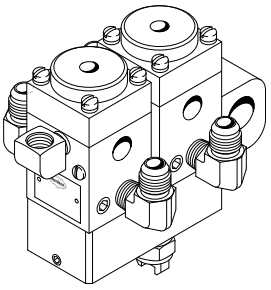

Dual-chamber

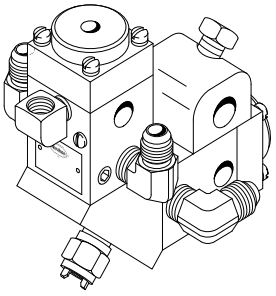

Dual-chamber angled

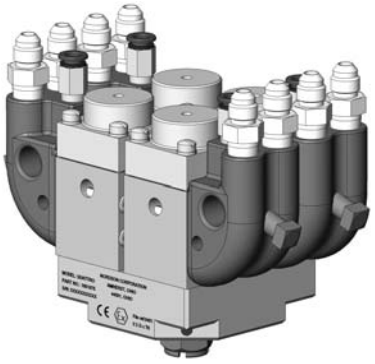

Quattro

© 2013 Nordson Corporation
All rights reserved

A7A Automatic Airless Spray Gun

Specifications

Properties	Type			
	Single Chamber	Dual Chamber	Dual-Chamber Angled	Quattro
Maximum Fluid Pressure, bar (psi)				
Standard	117 (1700)	117 (1700)	117 (1700)	103 (1500)
With High-Pressure Option Kit	207 (3000)	207 (3000)	207 (3000)	
Air Trigger Requirements, bar (psi)	2.75–8.27 (40–120)	2.75–8.27 (40–120)	2.75–8.27 (40–120)	2.75–8.27 (40–120)
Dimensions, cm (in.)				
Height	8.9 (3.5)	11.1 (4.375)	11.7 (4.625)	13.7 (5.38)
Length	8.9 (3.5)	13.3 (5.25)	15.2 (6.0)	15.0 (5.88)
Width	8.9 (3.5)	8.9 (3.5)	8.9 (3.5)	7.9 (3.12)
Weight, kg (oz or lbs)	0.45 (0.94 oz)	1.43 (3.15 oz)	1.20 (2.65 oz)	5.21 (11.5 lbs)

Ordering Information

Part	Description	Note
	A7A Guns	
153150	Standard (ball and seat)	
153160	Stainless steel (needle and seat)	
246789	High-speed (ball and seat, nickel)	
510010	Compound (ball and seat), with $1^1/_2$-in. unvalved extension	
245375	Gun, with 2.5 in. valve extension (needle and seat)	
248937	Dual-chamber (needle and seat)	
160062	Dual-chamber, angled, standard (ball and seat)	
248445	Gun, with tapered needle and seat	
709831	Gun, with large passage (ball and seat, large passage)	
337303	Stainless steel, waterborne (ball and seat, nickel)	
337302	Dual-chamber, stainless steel, waterborne (ball and seat, nickel)	
149097	Dual-chamber, stainless steel, drum coating (needle and seat)	
1601975	Quattro, stainless steel, LBS	

Continued...

© 2013 Nordson Corporation
All rights reserved

A7A Automatic Airless Spray Gun

Ordering Information *(contd)*

Part	Description	Note
	Replacement Packing Cartridges	
153152	Standard, compound, dual-chamber	
153090	Stainless steel	
245778	Corrosion-resistant	
244918	Ketone resistant	
	Service Kits	
106280	Tapered needle and seat	
106234	Needle and seat extended	
160354	Needle and seat with retainer	
106231	Ball and seat	
320031	Ball and seat, waterborne	
159447	Ball and seat, angled	
134972	Ball and seat with retainer	
337305	Dual-chamber, ball and seat, waterborne	
106230	Piston with seals	
106416	Needle and seat with O-rings	
709832	Ball and seat, large passage	
1072408	Modular A7A guns rebuild	F
	Conversion Kits	
106311	Cylinder, with detent adjust	A
160355	Dual A7A, angled, standard	B
160060	Dual A7A, angled, stainless steel	B
248941	A7A high-pressure	A, C
248939	Retrofit kit, A7A dual-chamber gun	D
1087754	A7A air-assisted airless adapter	E
	Accessories	
249160	Bar, gun mounting, 36-in	
1602271	Bar, gun mounting, 18-in	
325529	Muffler/exhaust valve kit	

NOTE A: Order two kits for converting both modules of a dual-chamber A7A gun.

B: Converts two single A7A guns or one dual A7A gun into angled model.

C: This conversion kit increases the operating pressure range to 207 bar (3000 psi).

D: This retrofit kit converts two A7A guns into one dual-chamber A7A gun.

E: Provides better fluid atomization for certain spaying applications. Uses A7AA Cross-Cut nozzles and air cap.

F: For use with Quattro gun. Order four kits to rebuild all four gun modules.

© 2013 Nordson Corporation
All rights reserved

A7A Automatic Airless Spray Gun

Fittings

Gun Part	Fitting Part	Description
153150	972176	Elbow connector, $^1/_2$-20 JIC x $^1/_4$-in. NPT
160062	972176	Elbow connector, $^1/_2$-20 JIC x $^1/_4$-in. NPT
246789	972176	Elbow connector, $^1/_2$-20 JIC x $^1/_4$-in. NPT
248937	972176	Elbow connector, $^1/_2$-20 JIC x $^1/_4$-in. NPT
709831	972176	Elbow connector, $^1/_2$-20 JIC x $^1/_4$-in. NPT
153160	972177	Elbow connector, $^1/_2$-20 JIC x $^1/_4$-in. NPT, stainless steel
245375	972177	Elbow connector, $^1/_2$-20 JIC x $^1/_4$-in. NPT, stainless steel
248445	972177	Elbow connector, $^1/_2$-20 JIC x $^1/_4$-in. NPT, stainless steel
337303	972177	Elbow connector, $^1/_2$-20 JIC x $^1/_4$-in. NPT, stainless steel
149097	972177	Elbow connector, $^1/_2$-20 JIC x $^1/_4$-in. NPT, stainless steel
337302	972177	Elbow connector, $^1/_2$-20 JIC x $^1/_4$-in. NPT, stainless steel
510010	972254	Elbow connector, $^3/_4$-16 JIC x $^1/_4$-in. NPT

© 2013 Nordson Corporation
All rights reserved

A7A Modular Automatic Airless Spray Gun

Description

The A7A single and dual modular automatic spray guns are high-cycle, air-operated, airless spray guns. They can be used for general finishing as well as ultra-high speed applications using solventborne or waterborne coatings.

Nozzles

Nozzles are not included with the spray guns. For information on Nordson airless nozzles and help in choosing the correct nozzle for your application, contact your Nordson representative.

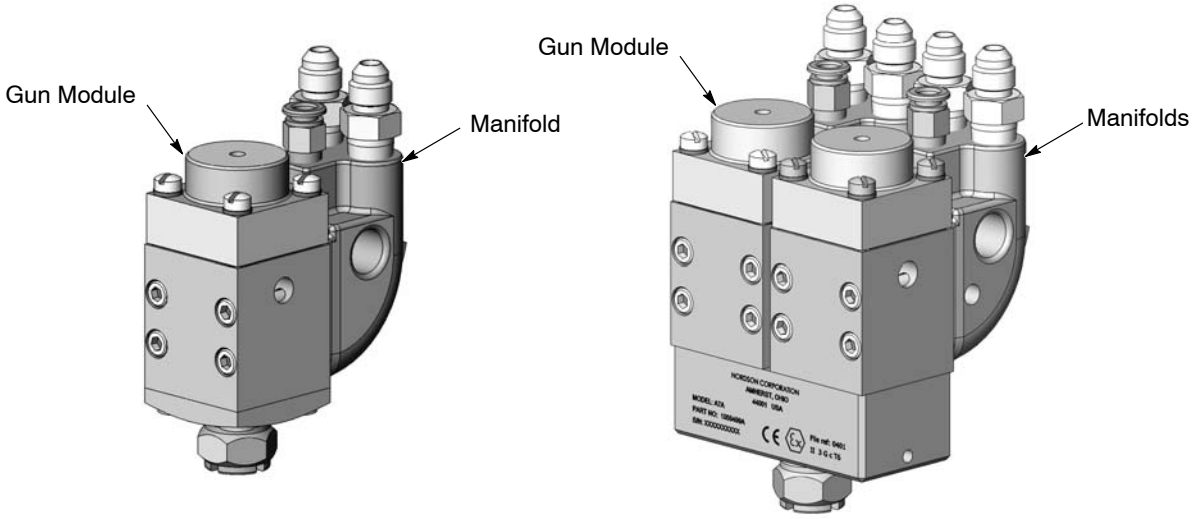

A7A Modular Spray Guns

© 2013 Nordson Corporation
All rights reserved

A7A Modular Automatic Airless Spray Gun

Parts

Single Gun

Item	Part	Description	Quantity	Note
—	1032379	GUN, A7A, stainless steel, LBS, with manifold	1	
1	- - - - - -	• MODULE, A7A, stainless steel, Large Ball and Seat	1	A
2	981140	• • SCREW, fillet head, #10–32 x 1.00 in., slotted, zinc	4	A
3	983120	• • WASHER, lock, split, #10, steel, nickel	4	A
4	- - - - - -	• • CYLINDER, air	1	A
5	153031	• • GASKET, gun, H20	1	A, B
6	342279	• • SPRING, compression, 0.75 x 0.72 x 0.06 in., stainless steel	1	A
7	702118	• • NUT, lock, #10–32, upper	1	A, B
8	138737	• • PISTON, H20/A7A H.P. assembly	1	A, B
8A	- - - - - -	• • • NUT, seal, lock	1	A, B
8B	940090	• • • O-RING, Viton, 0.208 ID x 0.070 in. wide, brown	1	A, B
8C	- - - - - -	• • • PISTON	1	A, B
9	940157	• • O-RING, Viton, black, 0.562 x 0.688 in.	1	A, B
10	- - - - - -	• • BODY, gun	1	A
11	1039171	• • CARTRIDGE, packing, protective coating	1	A
11A	940134	• • • O-RING, Viton, 0.438 x 0.563 x 0.063 in.	1	A
12	- - - - - -	• • BALL TIP and seat	1	A, C
12A	- - - - - -	• • • BALL TIP	1	A, C
12B	940174	• • • O-RING, Viton, black, 0.688 x 0.813 in.	1	A, B, C
12C	- - - - - -	• • • SEAT	1	A, C
13	1051598	• • SCREW, flat head, socket, #10–32 x 0.625 in., 17–4 stainless steel	4	A
14	152496	• • NUT, retaining	1	A
15	981847	• SCREW, socket, 10–32 x 1.625, zinc	4	A
16	940105	• O-RING, PTFE, 0.25 x 0.375 x 0.06 in.	3	A, B
17	1054583	• MANIFOLD, A7A	1	
18	981405	• SCREW, square, set, $^{3}/_{8}$–16 x 0.750 in., cup, zinc	1	
19	972029	• CONNECTOR, male, 37, $^{1}/_{2}$–20 x $^{1}/_{4}$ in. NPT, stainless steel	2	
20	972716	• CONNECTOR, male, $^{1}/_{4}$ in. tube x $^{1}/_{8}$ in. NPT	1	
NS	247646	• CARD, medical alert, injection	1	A
NS	152999	• WRENCH	1	A
NS	901905	• BRUSH	1	A
NS	901911	• WRENCH, adjustment, module	1	A

NOTE A: To replace order 1056459 Service Kit, Module, A7A, SS, LBS.

B: Included in 1072408 Service Kit, Rebuild, Modular A7A Guns.

C: Included in 320031 Kit, Ball and Seat, Nickel.

NS: Not Shown

© 2013 Nordson Corporation
All rights reserved

A7A Modular Automatic Airless Spray Gun

SERVICE NOTES:

1. Apply VC-3 thread-locking compound to threads before installing ball tip.
2. Apply VC-3 thread-locking compound to threads before tightening.
3. Apply pipe thread adhesive/ sealant (Loctite High Temp SS567 or equivalent) to threads before installing.

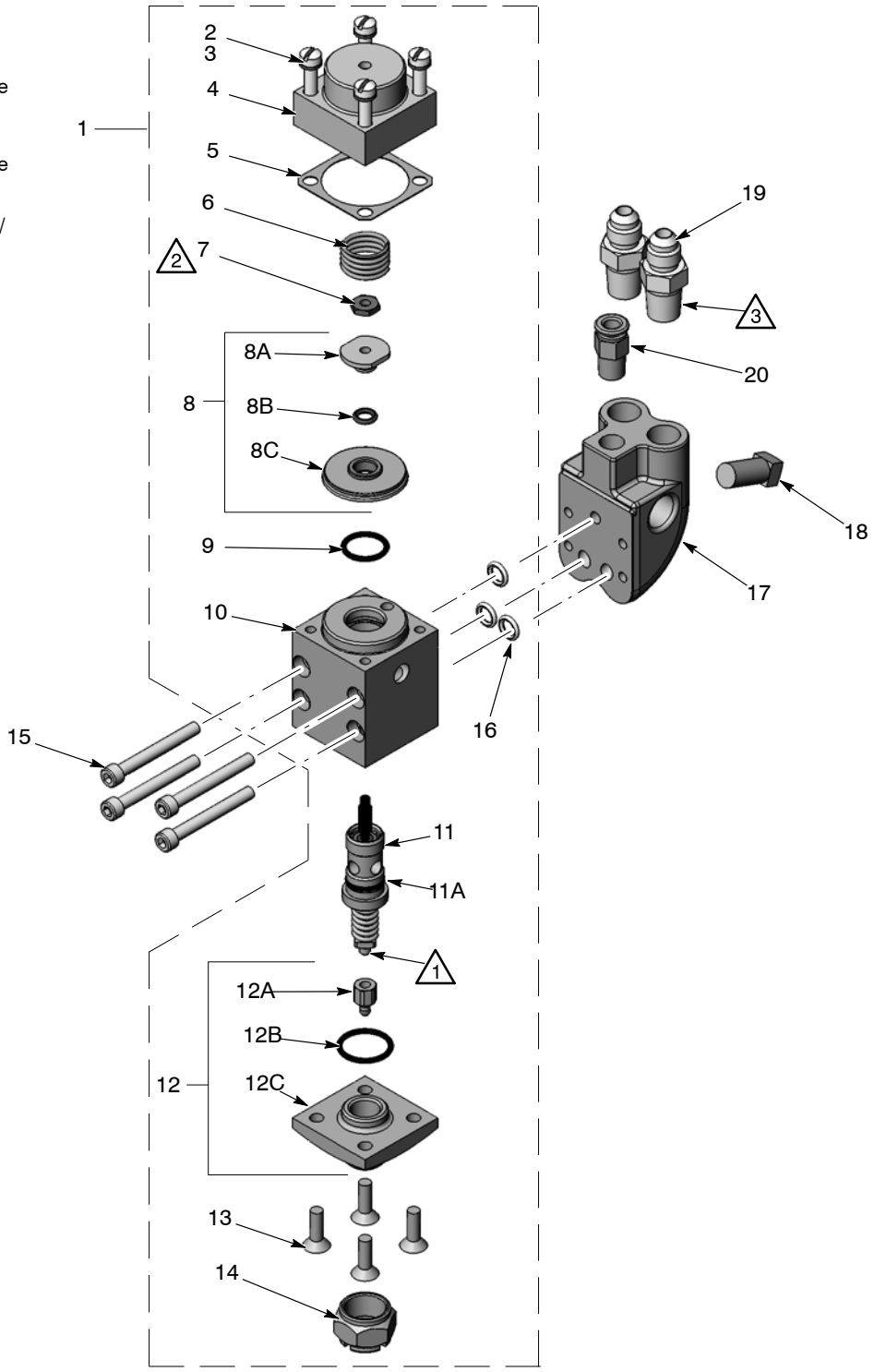

Single Gun Parts

© 2013 Nordson Corporation
All rights reserved

A7A Modular Automatic Airless Spray Gun

Dual Gun

Item	Part	Description	Quantity	Note
—	1059500	GUN, A7A, dual, stainless steel, LBS, with manifold	1	
1	- - - - - -	• MODULE, A7A, dual, stainless steel, Large Ball and Seat	1	A
2	981140	• • SCREW, fillet head, #10–32 x 1.00 in., slotted, zinc	8	A
3	983120	• • WASHER, lock, split, #10, steel, nickel	8	A
4	- - - - - -	• • CYLINDER, air	2	A
5	153031	• • GASKET, gun, H20	2	A, B
6	342279	• • SPRING, compression, 0.75 x 0.72 x 0.06 in., stainless steel	2	A
7	702118	• • NUT, lock, #10–32, upper	2	A, B
8	138737	• • PISTON, H20/A7A H.P. assembly	2	A, B
8A	- - - - - -	• • • NUT, seal, lock	2	A, B
8B	940090	• • • O-RING, Viton, 0.208 ID x 0.070 in. wide, brown	2	A, B
8C	- - - - - -	• • • PISTON	2	A, B
9	940157	• • O-RING, Viton, black, 0.562 x 0.688 in.	2	A, B
10	- - - - - -	• • BODY, gun	2	A
11	1039171	• • CARTRIDGE, packing, protective coating	2	A
11A	940134	• • • O-RING, Viton, 0.438 x 0.563 x 0.063 in.	1	A
12	- - - - - -	• • BALL TIP and seat	2	A, D
12A	- - - - - -	• • • BALL TIP	1	D
12B	- - - - - -	• • • SEAT	1	D
13	940174	• • O-RING, Viton, black, 0.688 x 0.813 in.	2	A, B
14	134975	• • RETAINER, seat, A7A	2	A
15	940105	• • O-RING, PTFE, 0.250 x 0.375 x 0.06 in.	2	A, B
16	- - - - - -	• • MANIFOLD, A7A dual, assembly	1	A
17	248932	• • • PLUG	2	A
18	900013	• • • BALL, 440 stainless steel, 0.125 in., 100	2	A
19	338693	• • SCREW, socket, #10–32 x 1.25 in., stainless steel	4	A
20	152496	• • NUT, retaining	1	A
21	981847	• SCREW, socket, 10–32 x 1.625, zinc	8	A
22	940105	• O-RING, PTFE, 0.25 x 0.375 x 0.06 in.	6	A, B
23	1054583	• MANIFOLD, A7A	2	
24	981405	• SCREW, square, set, $^{3}/_{8}$–16 x 0.750 in., cup, zinc	2	
25	972029	• CONNECTOR, male, 37, $^{1}/_{2}$–20 x $^{1}/_{4}$ in. NPT, stainless steel	4	
26	972716	• CONNECTOR, male, $^{1}/_{4}$ in. tube x $^{1}/_{8}$ in. NPT	2	
27	331475	• PIN, dowel, 0.250 x 0.625 in., H & G	1	C
NS	247646	• CARD, medical alert, injection	1	A
NS	152999	• WRENCH	1	A
NS	901905	• BRUSH	1	A
NS	901911	• WRENCH, adjustment, module	1	A

NOTE A: To replace order 1059498 Service Kit, Gun, A7A, Dual, SS, LBS.

B: Included in 1072408 Service Kit, Rebuild, Modular A7A Guns.

C: Dowel pin fits into holes in sides of manifolds and joins them together.

D: To replace the ball and seat, order kit 337305.

NS: Not Shown

© 2013 Nordson Corporation
All rights reserved

A7A Modular Automatic Airless Spray Gun

SERVICE NOTES:

1. Apply VC-3 thread-locking compound to threads before installing ball tip.
2. Apply VC-3 thread-locking compound to threads before tightening.
3. Apply pipe thread adhesive/ sealant (Loctite High Temp SS567 or equivalent) to threads before installing.

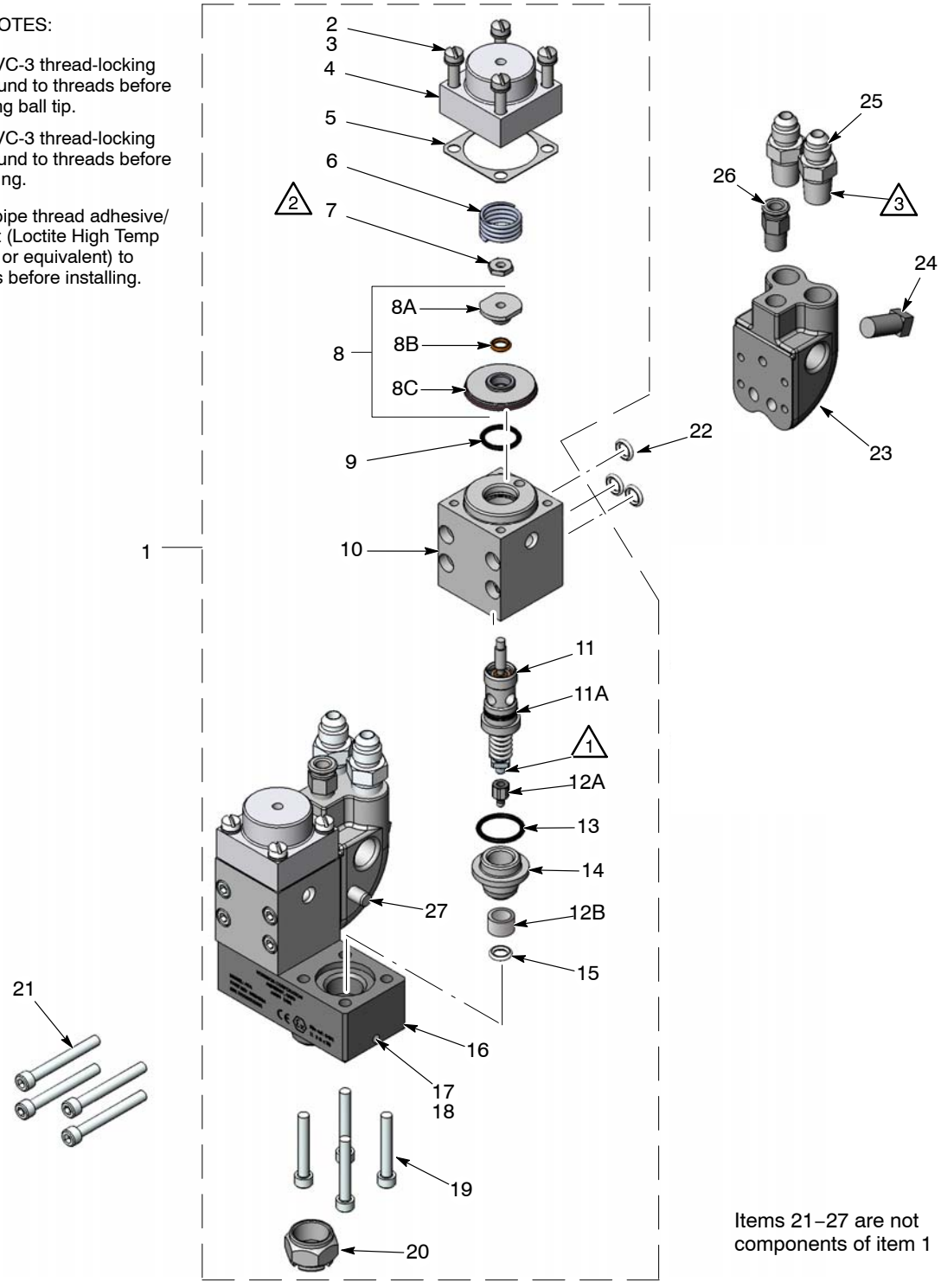

Dual Gun Parts

© 2013 Nordson Corporation
All rights reserved

A7A Modular Automatic Airless Spray Gun

Options

Part	Description	Note
249160	Bar, gun mounting, 36-in	
1602271	Bar, gun mounting, 18-in	
325529	Muffler/exhaust valve kit	
973000	Nipple, steel, schedule 40, $^1/_8$ in. NPT, 0.75 in. long	A
NOTE A: Use to install quick-exhaust valve.		

Service Kits

Part	Description	Note
1072408	SERVICE KIT, Rebuild, Modular A7A Guns	A
320031	KIT, Ball and Seat, Nickel	B
NOTE A: Order two kits to rebuild a dual gun. B: Used on single gun only.		

Service Parts

Part	Description	Note
900424	COMPOUND, thread lock, VC-3	
900481	ADHESIVE, pipe thread/hydraulic sealant	

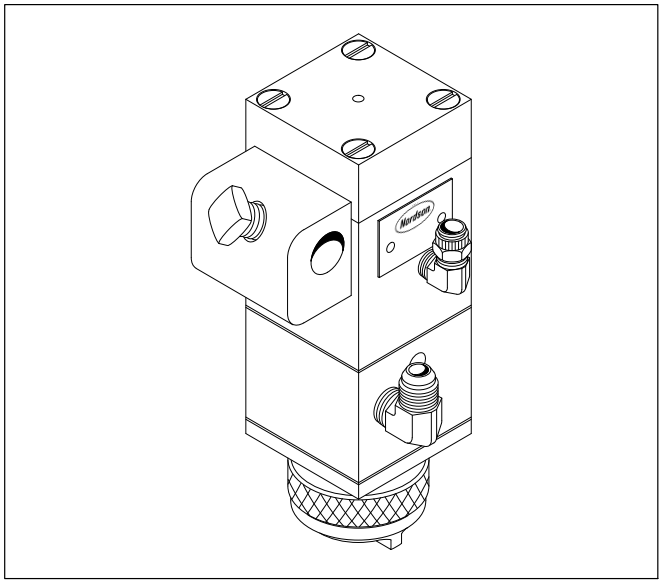

© 2013 Nordson Corporation
All rights reserved

AD-29 and AD-29A Automatic Air Spray Gun

Description

The Nordson Model AD-29 automatic gun is a compact, high-cycle, air spray gun. The AD-29 gun sprays liquid coatings in low flow rates in small, flat, or conical patterns. At 1 inch from the part, a 1 inch dot will be sprayed. At 2 inches from the part, a 2 inch dot will be sprayed, etc.

The fast trigger-cycle capability enables the AD-29 gun to be used for ultra high-speed applications. Design simplicity and rugged construction provide long life and easy field maintenance.

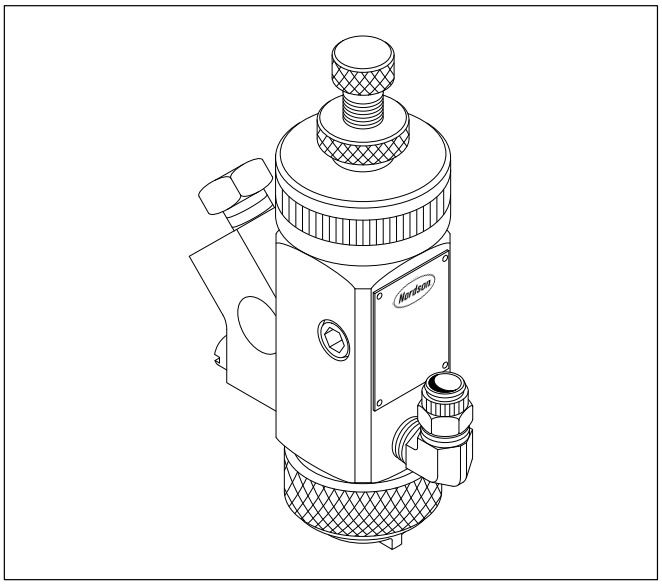

Features

- Applies coatings and adhesives
- Fast trigger-cycle capability
- Simple maintenance
- Rugged design
- Aluminum construction
- Air-actuated
- Stainless steel needle and seats

Specifications

Trigger Air Pressure, bar (psi)	2.75–4.75 (40–70)
Dimensions, cm (in.)	
Length	11.8 (4.63)
Height	6.7 (2.63)
Width	3.2 (1.25)
Weight, kg (oz)	0.31 (11)

© 2013 Nordson Corporation
All rights reserved

AD-29 and AD-29A Automatic Air Spray Gun

Ordering Information

Part	Description
	Standard Models
270137	AD-29 gun • continuous flow of atomizing air • flat spray pattern • slightly higher flow rates
270571	AD-29 gun • trigger air supplies atomizing air • flat spray pattern • slightly higher flow rates • interrupted air
270960	AD-29A gun • trigger air supplies atomizing air • round spray pattern • very low flow rates

© 2013 Nordson Corporation
All rights reserved

Maverick Air Spray Gun

Description

The compact Maverick Air Spray gun provides superior atomization for optimum performance in demanding liquid painting production applications. The spray gun can be used with a variety of coatings on a range of substrates from wood to metal, and glass. The spray gun's lightweight, ergonomic design, easy trigger pull, and single–knob fan adjustment reduce fatigue for maximum operator efficiency.

Each Maverick gun is shipped standard with a 1.1-mm fluid tip, needle, and precision-machined air cap combination. Additional siphon-feed and pressure-feed air cap kits are available to expand the capabilities of the gun. With these options, the Maverick gun can spray a variety of coatings ranging from low viscosity, automotive-type base coat and clear coats, as well as high-solids solvent and waterbased coatings. A stainless-steel fluid tip also enables the Maverick gun to spray waterborne coatings.

To assure the ready-to-spray performance and quality of the spray gun, every Maverick gun is tested prior to shipment for excellent "Out of box" performance.

Each Maverick spray gun is shipped with a set of replacement wear items including O-rings, seals, and packings. The additional parts allow the operator to complete simple maintenance to the gun, without lengthy downtime, as parts wear with normal use.

Features

- **Convenient, built-in cheater valve for greater air pressure control.**
- **Stainless-steel fluid passages accommodate a variety of coatings.**
- **Lightweight, ergonomic design and easy trigger pivot reduce operator fatigue.**
- **Hardened, stainless-steel needle for longer life and lower maintenance costs.**
- **Self-adjusting packings.**
- **Variety of nozzle configurations available for maximum flexibility to spray wide range of materials.**



Maverick Air Spray Gun

Specifications

Maximum air pressure	43 psi (3.0 bar)
Fluid inlet size	⅜ in NPS
Air inlet size	¼ in NPS
Weight	0.7 lbs (339 g)

© 2013 Nordson Corporation
All rights reserved

Maverick Air Spray Gun

Ordering Information

Part	Description	Note
1059760	GUN, manual air spray, with 1.0-mm air cap	
1059761	REPAIR KIT, manual air spray gun	A
NOTE A:	Kit includes a complete set of replaceable wear items.	

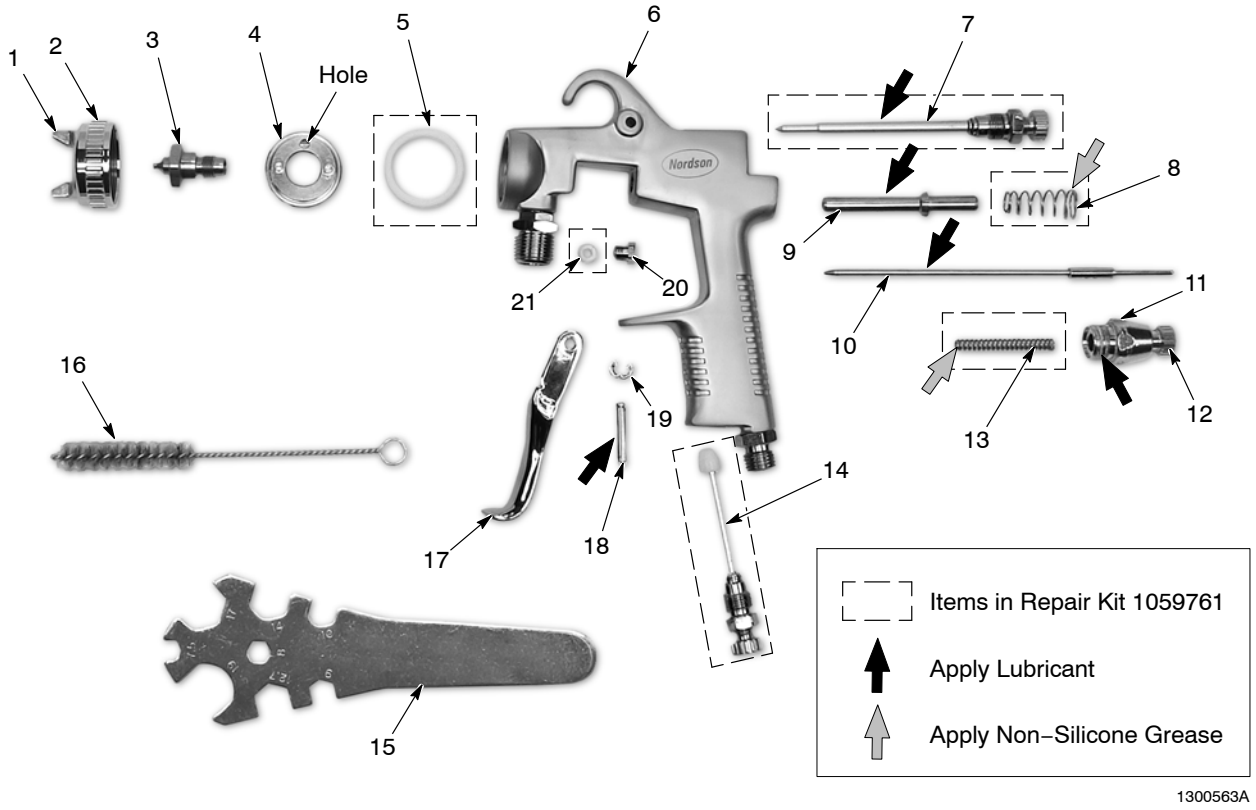

1. Air cap
2. Retaining ring
3. Nozzle/Fluid tip
4. Gasket ring (Refer to *Note*)
5. Baffle
6. Gun body
7. Pattern valve
8. Valve spring
9. Air valve
10. Needle
11. Air valve bushing
12. Air valve adjuster screw
13. Needle spring
14. Air valve adjustment valve
15. Spanner wrench
16. Brush
17. Trigger
18. Bearing stud
19. C-ring
20. Seal nut
21. Needle seal

Note: When replacing the gasket ring (4) make sure the hole is oriented in the 12 o'clock position as shown.

© 2013 Nordson Corporation
All rights reserved

Maverick Air Spray Gun

NOTE: The spray gun is shipped standard with a 1.1-mm fluid tip, needle, and air cap combination. Additional size kit combinations are available depending on the application. Make sure to replace the complete fluid tip, needle, and air cap set.

Part	Description	Note
Siphon Feed Kits		
1059762	AIR CAP KIT, siphon feed, air spray, 1.1 mm	
1059764	AIR CAP KIT, siphon feed, air spray 1.4 mm	
1059766	AIR CAP KIT, siphon feed, air spray, 1.8 mm	
1059768	AIR CAP KIT, siphon feed, air spray, 2.0 mm	
Pressure Feed Kits		
1059769	AIR CAP KIT, pressure feed, air spray, 0.8 mm	
1059770	AIR CAP KIT, pressure feed, air spray, 1.4 mm	
1059771	AIR CAP KIT, pressure feed, air spray, 1.8 mm	
1059772	AIR CAP KIT, pressure feed, air spray, 2.0 mm	

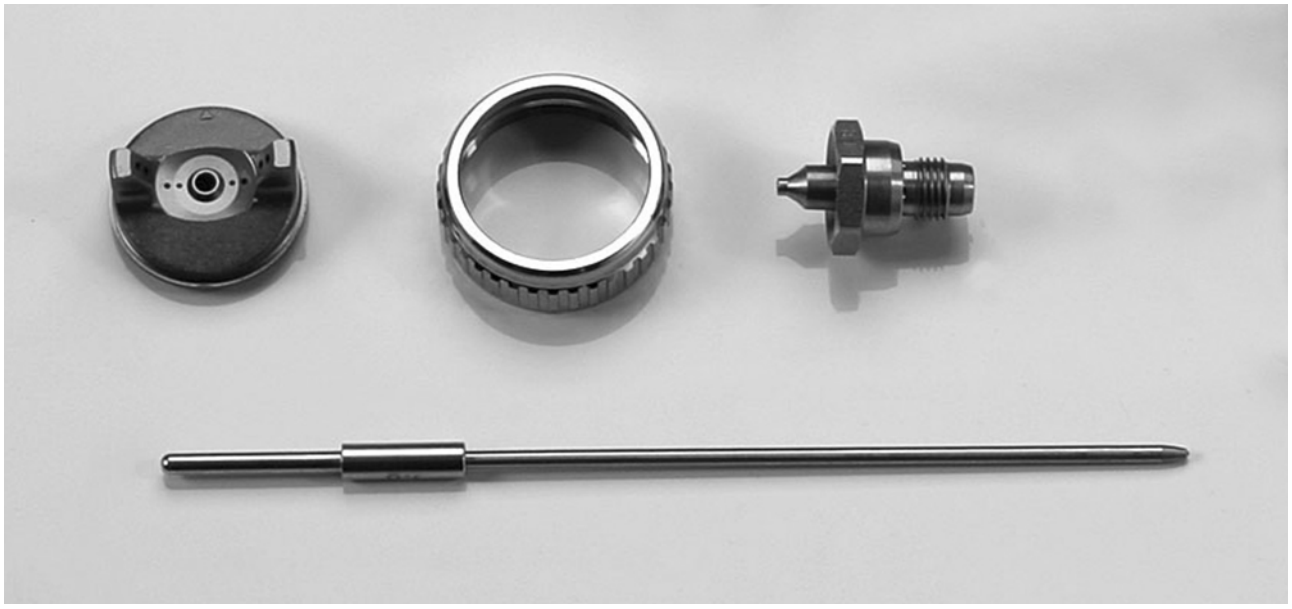

© 2013 Nordson Corporation
All rights reserved

This page intentionally left blank.

© 2013 Nordson Corporation
All rights reserved

Maverick HVLP Spray Gun

Description

The lightweight Maverick HVLP spray gun provides superior atomization for optimum performance in today's demanding liquid painting production applications. The spray gun can be used with a variety of coatings on a wide range of substrates from wood to metal, and glass. The spray gun's lightweight, ergonomic design, easy trigger pull, and single knob fan adjustment reduce operator fatigue for maximum operating efficiency.

Each Maverick gun is shipped standard with a 1.0-mm fluid tip, needle, and precision-machined air cap combination. Additional siphon-feed and pressure-feed air cap kits and HVLP compliance kits are available to expand the gun's capabilities. With these options, the Maverick can spray a variety of coatings ranging from low-viscosity, automotive-type base coat and clear coats, as well as high-solids, solvent and waterbased coatings.

A stainless-steel fluid tip also enables the Maverick gun to spray waterborne coatings.

To assure the ready-to-spray performance and quality of the spray gun, every Maverick gun is tested prior to shipment for excellent "Out of box" performance.

Each Maverick spray gun is shipped with a set of replacement wear items including O-rings, seals, fittings, and packings. The additional parts allow the operator to complete simple maintenance to the spray gun, without lengthy downtime,as parts wear with normal use.

Features

- **Built-in, cheater valve for greater air pressure control.**
- **Stainless-steel fluid passages accommodate a variety of coatings.**
- **Lightweight design and easy trigger pivot reduce operator fatigue.**
- **Hardened, stainless-steel needle for longer life and lower maintenance costs.**
- **Self-adjusting packings.**
- **Variety of nozzle configurations available for maximum flexibility to spray wide range of materials.**



Maverick HVLP Spray Gun

Specifications

Maximum air pressure	43 psi (3.0 bar)
Fluid inlet size	⅜ in NPS
Air inlet size	¼ in NPS
Weight	1.2 lbs (558 g)

© 2013 Nordson Corporation
All rights reserved

Maverick HVLP Spray Gun

Ordering Information

Part	Description	Note
1059773	GUN, manual HVLP spray, with 1.0-mm air cap	
1059774	REPAIR KIT, manual HVLP spray gun	A
NOTE A:	Kit includes a complete set of replaceable wear items.	

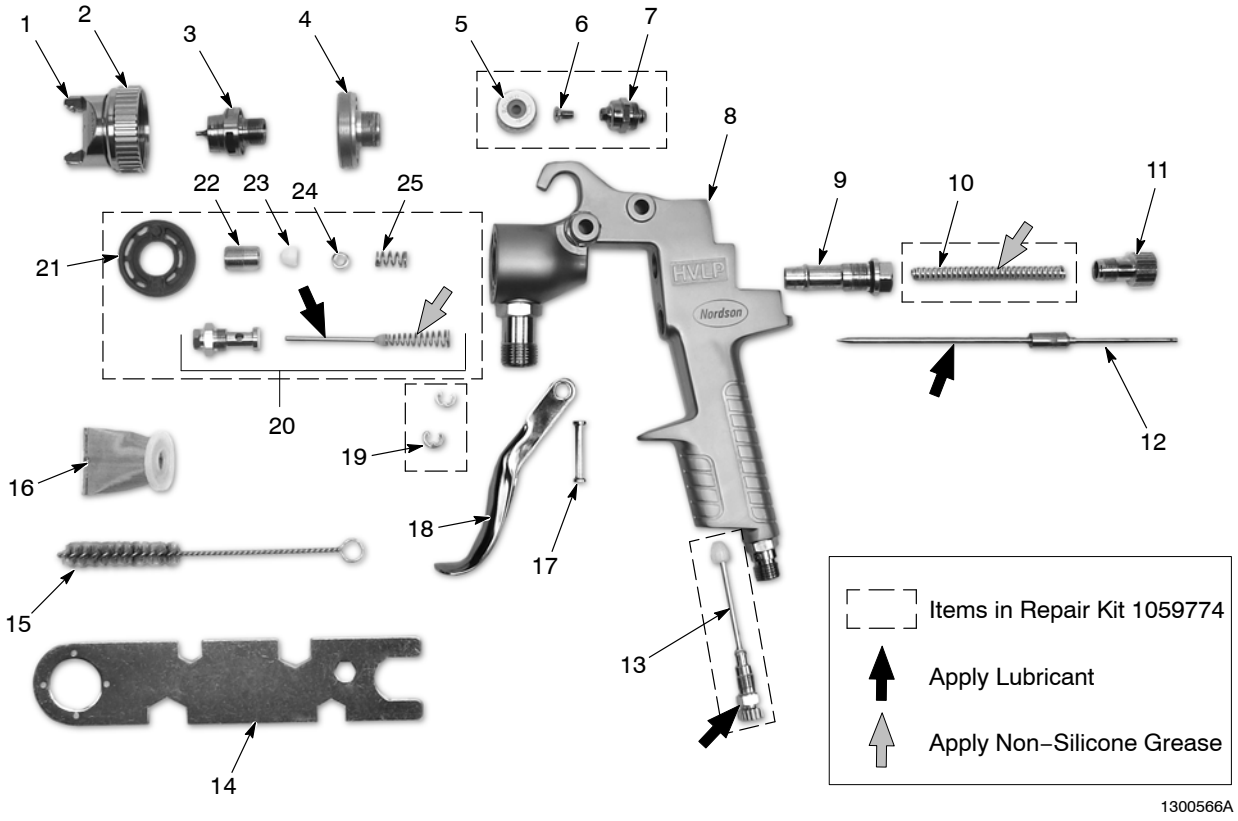

22. Air cap
23. Retaining ring
24. Nozzle/Fluid tip
25. Ring
26. Control knob
27. Screw
28. Spray regulator
29. Gun body
30. Needle housing
31. Needle spring
32. Fluid control knob
33. Needle
34. Air adjust valve
35. Spanner wrench
36. Brush
37. Material sleeve
38. Pin
39. Trigger
40. Washer
41. Air valve assembly
42. Green plastic ring
43. Seal nut
44. Seal
45. Washer
46. Spring

© 2013 Nordson Corporation
All rights reserved

Maverick HVLP Spray Gun

NOTE: The spray gun is shipped standard with a 1.0-mm fluid tip, needle, and air cap combination. Additional size kit combinations are available depending on the application. Make sure to replace the complete fluid tip, needle, and air cap set.

Part	Description	Note
Siphon Feed Kits		
1059775	AIR CAP KIT, siphon feed, HVLP spray, 1.0 mm	
1059776	AIR CAP KIT, siphon feed, HVLP spray, 1.4 mm	
1059777	AIR CAP KIT, siphon feed, HVLP spray, 1.7 mm	
1059778	AIR CAP KIT, siphon feed, HVLP spray, 2.0 mm	
1059779	AIR CAP KIT, siphon feed, HVLP spray, 2.3 mm	
HVLP Siphon Feed Compliance Kits		
1059793	AIR CAP KIT, compliance, siphon feed, HVLP spray, 1.0 mm	A
1059794	AIR CAP KIT, compliance, siphon feed, HVLP spray, 1.4 mm	A
1059795	AIR CAP KIT, compliance, siphon feed, HVLP spray, 1.7 mm	A
1059796	AIR CAP KIT, compliance, siphon feed, HVLP spray, 2.0 mm	A
1059797	AIR CAP KIT, compliance, siphon feed, HVLP spray, 2.3 mm	A
Pressure Feed Kits		
1059790	AIR CAP KIT, pressure feed, HVLP spray, 1.4 mm	
1059791	AIR CAP KIT, pressure feed, HVLP spray, 1.7 mm	
1059792	AIR CAP KIT, pressure feed, HVLP spray, 2.3 mm	
HVLP Pressure Feed Compliance Kits		
1059798	AIR CAP KIT, compliance, pressure feed, HVLP spray, 1.4 mm	A
1059800	AIR CAP KIT, compliance, pressure feed, HVLP spray, 1.7 mm	A
1059802	AIR CAP KIT, compliance, pressure feed, HVLP spray, 2.3 mm	A
NOTE A: Compliance kit includes air cap, retaining ring, pressure gage, and tubing. The kit does not include fluid tip or needle.		

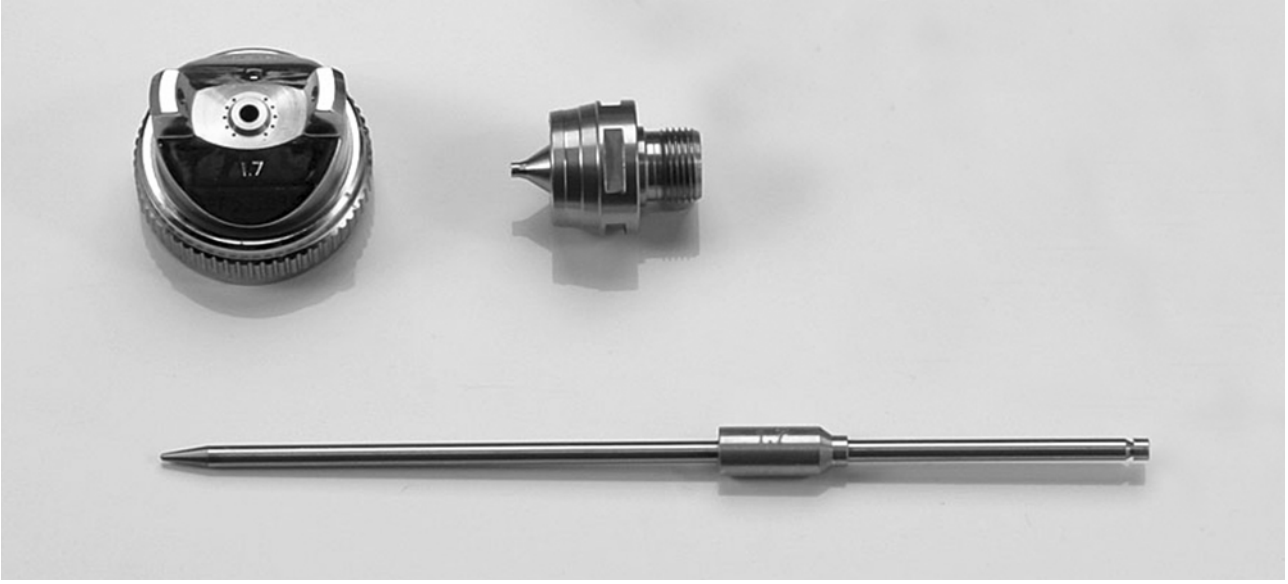

© 2013 Nordson Corporation
All rights reserved

This page intentionally left blank.

© 2013 Nordson Corporation
All rights reserved

Prism® Non-Electrostatic Spray Guns

Available Models (Non-circulating models shown. Circulating models also available.)

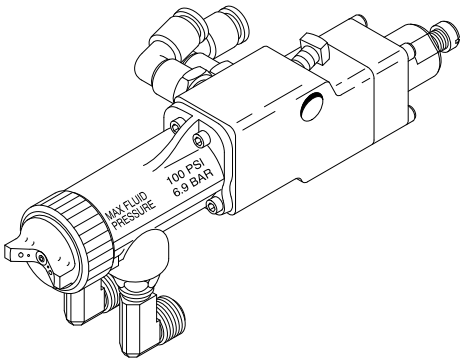

Automatic Air Spray and HVLP

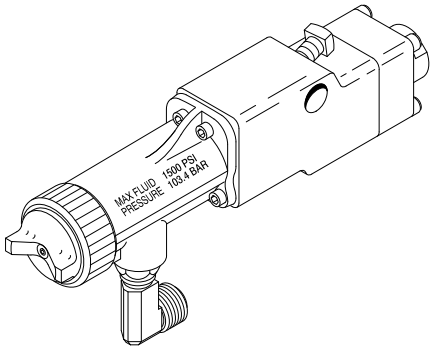

Automatic Airless

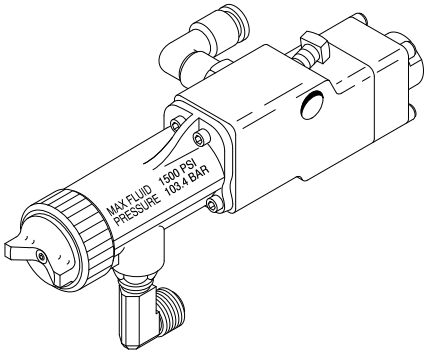

Automatic Air-Assisted Airless

© 2013 Nordson Corporation
All rights reserved

© 2013 Nordson Corporation
All rights reserved

Prism Low-Pressure Automatic Spray Guns

Description

The Nordson Prism Air Spray and High-Volume Low-Pressure (HVLP) automatic spray guns are air-atomizing, and can be used in both heated and unheated, circulating and non-circulating spray systems. These guns are compatible with a wide variety of coating materials including general solventborne, waterborne, metallics, high-solids, and multi-component.

Options include a variety of fluid tips and air caps, air and fluid hoses, air pressure regulators and gauges, and fittings. HVLP compliance kits are available for each HVLP air cap.

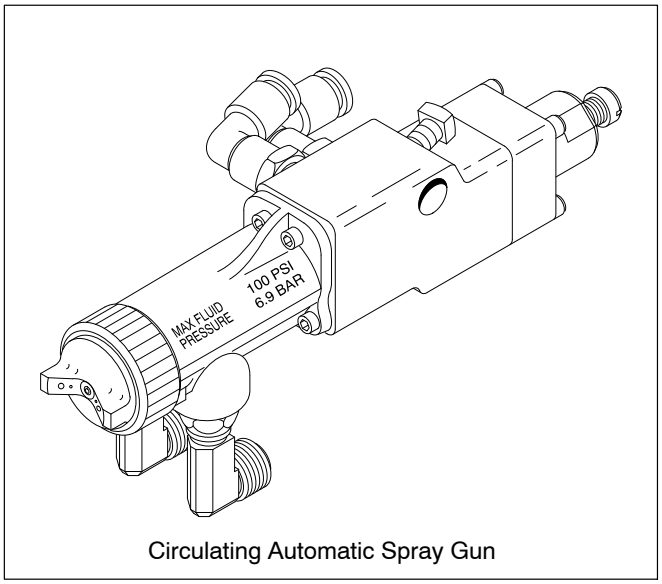

Circulating Automatic Spray Gun

Features

- Non-circulating or circulating versions
- Adjustable pattern control (horn) air pressure
- Tool adjustable atomizing air
- Adjustable fluid flow at the gun (manual gun only)
- Easy disassembly for cleaning and repair
- Self-adjusting packing cartridge
- Low trigger force to reduce operator fatigue (manual gun only)
- Split, independently adjustable atomizing and horn air (automatic gun only)

© 2013 Nordson Corporation
All rights reserved

Prism Low-Pressure Automatic Spray Guns

Specifications

	Automatic Spray Gun
Dimensions, cm (in.)	
Length	23.4 (9.23)
Height	9.5 (3.75)
Width	7.4 (2.91)
Weight, g (oz)	
Non-circulating	729 (25.7)
Circulating	798 (28.1)
Operating Pressures, bar (psi)	
Air:	
Maximum input pressure	6.9 (100)
Fluid:	
Maximum input pressure	6.9 (100)
Maximum fluid temperature	82 °C (180 °F)
Air Hose	
Length:	
Optimum for HVLP, m (ft)	7.62 (25)
Minimum ID required for HVLP, mm (in.)	6.4 ($^1/_4$)
Fittings	
Air:	
Standard fitting	—
Atomization	$^3/_8$-in. tube
Horn	$^3/_8$-in. tube
Trigger	$^1/_4$-in. tube
Fluid:	
Maximum input pressure	—
Standard swivel	$^3/_8$-18 NPSM, male

© 2013 Nordson Corporation
All rights reserved

Prism Low-Pressure Automatic Spray Guns

Ordering Information

Part	Description	Note
	Automatic Air Spray and HVLP Models	
1089971	Air Spray/HVLP automatic gun, circulating	
1089973	Air Spray/HVLP automatic gun, non-circulating	
	Kits	
325529	Quick exhaust valve (muffler)	C, B
325646	Extension, air, HVLP, circulating	A, B
325647	Extension, air, HVLP, non-circulating	A, B
325653	Fluid seal and swivel (hot paint)	A, B
325654	Air seal	B
325657	Air valve	A
1050238	Packing cartridge	A, B

NOTE A: Order this kit for use with the manual spray gun. (Manual gun obsolete)
B: Order this kit for use with the automatic spray gun.
C: This kit is optional and must be ordered separately.

© 2013 Nordson Corporation
All rights reserved

© 2013 Nordson Corporation
All rights reserved

Prism Low-Pressure Automatic Spray Guns

Accessories

Fluid tips, air caps, nozzles, and compliance kits must be ordered separately. Fluid tips are marked with the orifice size.

HVLP Fluid Tips

HVLP Fluid Tip Selection Guide

- Understand flow rate required for application. Flow rate is a function of film build, pattern width, line speed, coating material solids, and spray gun travel speed.
- After making your initial tip ID choice, Nordson recommends having the next size lower and higher on hand as well.
- Flow rate gun using coating material.
- Make sure that un-atomized fluid stream breaks between 10 and 14 inches. Adjust fluid tip ID to get correct flow rate and fluid stream break instead of increasing or decreasing fluid pressure.

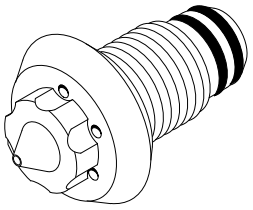

HVLP Fluid Tip

Part	Description
325571	.020
325572	.025
325573	.030
325574	.035
325575	.040
325576	.050
325577	.060
325578	.070
325579	.080
325580	.100
NOTE: O-ring, part 940120, is included with all HVLP fluid tips.	

© 2013 Nordson Corporation
All rights reserved

Prism Low-Pressure Automatic Spray Guns

HVLP Air Caps (Production and Compliance)

HVLP Air Cap Selection Guide

- A larger air cap will provide lower cap pressures and higher air flow, but may yield courser atomization.
- Lower air cap pressures produce a softer spray and theoretically, improved transfer efficiency.
- Smaller air caps will produce finer atomization.
- Smaller air caps will require higher air cap pressures to atomize.
- Smaller fluid tips will work best with smaller air caps.
- Larger fluid tips will work best with larger air caps.
- As the fluid tip ID increases, the airflow through the atomizing section of the air cap decreases, as a result, there is less air available for atomization.
- Higher viscosity coatings and higher flow rates require more airflow for atomization.
- Atomizing air and horn air are completely independent in automatic spray guns.

Description	Part
General Purpose Air Caps	325717 325719 325721
Very Light Viscosity, Low Solids Air Caps	325714 325715 325716
Heavy Viscosity, High Solids, High Flow	325723 325725 325727

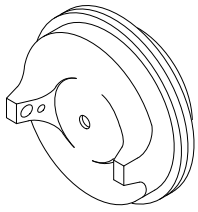

HVLP Production Air Cap

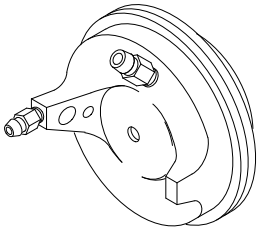

HVLP Compliance Air Cap

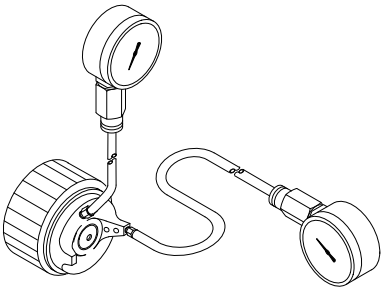

Compliance Kit

© 2013 Nordson Corporation
All rights reserved

Prism Low-Pressure Automatic Spray Guns

HVLP Air Cap Application Key

Air Cap Locator	Coating Characteristics	Maximum Airflow (SCFM)	Typical Coatings
A	Very Light Viscosity, Very Low Solids (<25%) Low Flow (<5 oz/min)	10–12	Stains, Wash Primers, Bleaches, Fine Finish
B	Light Viscosity, Low Solids (25–30%) Low Flow (<5 oz/min) to Medium Flow (5–10 oz/min)	13–15	Stains, Wash Primers, ADPRO, Laquer Clear Coat, Fine Finish
C	Light Viscosity, Low Solids (25–30%) Medium Flow (5–10 oz/min)	17–20	Primers, ADPRO, Laquer Clear Coat, Metallics, Solid Colors, Enamels, Urethanes, Waterbornes
	Medium Viscosity, Medium Solids (30–50%) Low Flow (<5 oz/min)		
D	Medium Viscosity, Medium Solids (30–50%) Medium Flow (5–10 oz/min) to High Flow (10–20 oz/min)	22–25	Metallics, Solid Colors, Enamels, Urethanes, Waterbornes, Plural Component, Corrosion Protection
	Heavy Viscosity, High Solids (>75%) Low Flow (<5 oz/min)		
E	Medium Viscosity, Medium Solids (30–50%) High Flow (10–20 oz/min) to Very High Flow (>20 oz/min)	28–34	High Solids Enamels and Urethanes, High Solids Waterbornes, Plural Component, Corrosion Protection
	Heavy Viscosity, High Solids (>75%) Medium Flow (5–10 oz/min) to High Flow (10–20 oz/min)		
X	Not Recommended		

© 2013 Nordson Corporation
All rights reserved

Prism Low-Pressure Automatic Spray Guns

HVLP Air Cap Selection Table

	Air Cap Part Number (Atomizing Air Hole Diameter)								
Tip Orifice (Inches)	**325714** (.140”)	**325715** (.150”)	**325716** (.160”)	**325717** (.170”)	**325719** (.190”)	**325721** (.210”)	**325723** (.230”)	**325725** (.250”)	**325727** (.270”)
0.030	A	A	B	B	C	D	E	X	X
0.035	A	A	B	B	C	D	E	E	X
0.040	A	A	B	B	C	D	E	E	E
0.050	A	A	A	B	C	C	D	E	E
0.060	X	A	A	A	B	C	D	E	E
0.070	X	X	A	A	B	C	D	E	E
0.080	X	X	X	A	B	C	D	E	E
0.100	X	X	X	X	X	B	C	D	E
NOTE: 0.020 and 0.025 tip orifices are also available for very low flow.									
Compliance Air Cap	325624	325625	325626		325628		325630	325631	325632
NOTE: Compliance air caps are modified caps for testing air pressure ONLY.									
Compliance Kits	325633	325634	325635	325636	325637	325638	325639	325640	325641
NOTE: Compliance kits include caps, gauges, and air tubing. Compliance kits are modified for testing ONLY.									

© 2013 Nordson Corporation
All rights reserved

Air Spray Fluid Tips

Air Spray Fluid Tip Selection Guide

- Understand flow rate required for application. Flow rate is a function of film build, pattern width, line speed, coating material solids, and spray gun travel speed.
- After making your initial tip ID choice, Nordson recommends having the next size lower and higher on hand as well.
- Flow rate gun using coating material.
- Make sure that un-atomized fluid stream breaks between 10 and 14 inches. Adjust fluid tip ID to get the correct flow rate and fluid stream break instead of increasing or decreasing fluid pressure.

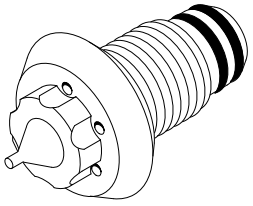

Air Spray Fluid Tip

Part	Description
325591	.012
325592	.020
325593	.030
325594	.040
325595	.046
325596	.059
325597	.070
325598	.080
325600	.100
325601	.132
NOTE: O-ring, part 940120 is included with all air spray fluid tips.	

Conical Air Spray Nozzles

Conical Air Spray Nozzle Selection Guide

When selecting a nozzle, consider the type of coating material application.

Part	Description
336604	25.4 cm (10 in.)
336605	33.0 cm (13 in.)

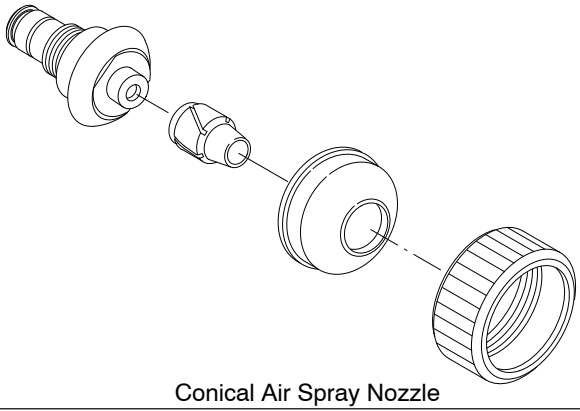

Conical Air Spray Nozzle

© 2013 Nordson Corporation
All rights reserved

Prism Low-Pressure Automatic Spray Guns

Air Spray Air Caps

Air Spray Air Cap Selection Guide

Air caps are optional and must be ordered separately. Air caps are marked with the numbers in the description.

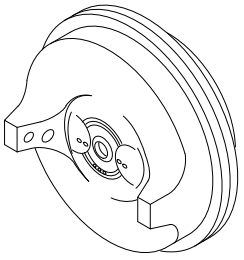

Air Spray Air Cap

Air Cap	Air Cap Description	Atomization Air Pressure	SCFM	Flow Rate	Fan Pattern Width	Usage
325615	985	Less than 2.41 bar (35 psi)	8.2 @ 20 psi	0.059–0.295 l/min (2–10 oz/min)	15.24–30.48 cm (6–12 in.)	Universal air cap; low flow rates
325616	986	2.07–4.14 bar (30–60 psi)	12 @ 40 psi	0.236–0.355 l/min (8–12 oz/min)	30.48–45.72 cm (12–18 in.)	Medium flow rates
325617	987	1.38–4.14 bar (20–60 psi)	16 @ 40 psi	0.296–0.592 l/min (10–20 oz/min)	30.48–45.72 cm (12–18 in.)	High flow rates, use with fluid tips 0.80 in. and larger.
325618	988	Less than 2.41 bar (35 psi)	12 @ 40 psi	0.059–0.326 l/min (2–11 oz/min)	30.48–45.72 cm (12–18 in.)	Low flow rates, high solids or metallics
325611	991	Less than 2.76 bar (40 psi)	8 @ 15 psi	0.059–0.326 l/min (2–11 oz/min)	less than or equal to 40.64 cm (16 in.)	Low flow rates, high viscosities
325612	992	Less than 2.76 bar (40 psi)	8 @ 15 psi	0.059–0.326 l/min (2–11 oz/min)	less than or equal to 40.64 cm (16 in.)	Low flow rates, high solids or metallics

© 2013 Nordson Corporation
All rights reserved

Prism Airless and Air-Assisted Airless Automatic Spray Guns

Cross-Cut Nozzle Selection Guide

- Blank nozzle gasket P/N 122481 is available to eliminate the use of a restrictor when desired. See "Filter Screen, Turbulence Plate and Restrictor Selection Chart" on page A37 in the *Nordson Airless Nozzle Catalog*.

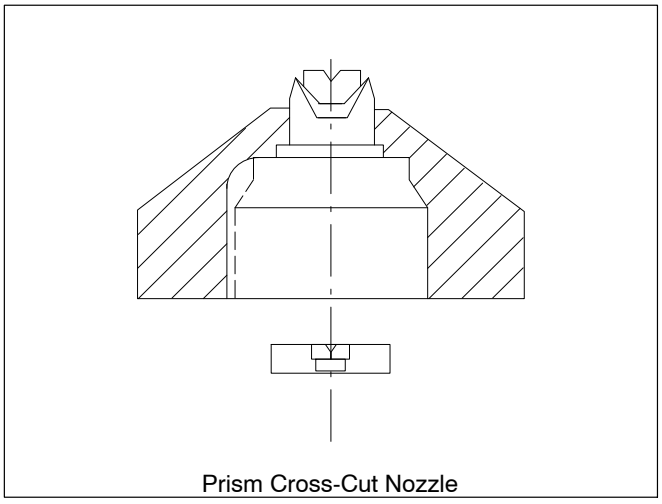

Prism Cross-Cut Nozzle

Reference Size Flow/Pattern Width	Equivalent Diameter (in.)	Relative Film Build	Foot-notes	Pre-atomization Device (P/N)	Pattern Test			Part Number
					Min (in.)	Max (in.)	Distance	
.0075/08	0.0039	0.08	1, Ct	123050	1.38	1.63	1.00	1020261
.01/08	0.1067	0.11	1, Ct	123050	1.38	1.63	1.00	1020260
.02/08	0.0063	0.21	1, Ct	123050	1.38	1.63	1.00	1020262
.03/08	0.0077	0.32	1	123050	8.00	10.00	10.00	123201
.03/10	0.0077	0.26	1	123050	10.00	12.00	10.00	123202
.03/12	0.0077	0.22	1	123050	12.00	14.00	10.00	123203
.03/14	0.0077	0.19	1	123050	14.00	16.00	10.00	123204
.03/16	0.0077	0.17	1	123050	16.00	18.00	10.00	123205
.04/10	0.0089	0.35	1	123051	10.00	12.00	10.00	123206
.04/12	0.0089	0.30	1	123051	12.00	14.00	10.00	123207
.04/14	0.0089	0.26	1	123051	14.00	16.00	10.00	123208
.04/16	0.0089	0.23	1	123051	16.00	18.00	10.00	123209
.06/08	0.0110	0.64	1	123052	8.00	10.00	10.00	123210
.06/10	0.0110	0.52	1	123052	10.00	12.00	10.00	123211
.06/12	0.0110	0.44	1	123052	12.00	14.00	10.00	123212
.06/14	0.0110	0.38	1	123052	14.00	16.00	10.00	123213
.06/16	0.0110	0.34	1	123052	16.00	18.00	10.00	123214
FOOTNOTES: Ct = Close tolerance flow; 1 = Type 1 Carbide								

Continued on next page

© 2013 Nordson Corporation
All rights reserved

Prism Airless and Air-Assisted Airless Automatic Spray Guns

Cross-Cut Nozzle Selection Guide *(contd)*

Reference Size Flow/Pattern Width	Equivalent Diameter (in.)	Relative Film Build	Foot-notes	Pre-atomization Device (P/N)	Pattern Test			Part Number
					Min (in.)	Max (in.)	Distance	
.06/18	0.0110	0.30	1	123052	18.00	20.00	10.00	123215
.06/20	0.0110	0.27	1	123052	20.00	22.00	10.00	123216
.06/22	0.0110	0.25	1	123052	22.00	24.00	10.00	123217
.06/24	0.0110	0.23	1	123052	24.00	26.00	10.00	123218
.09/08	0.0134	0.96	1	123053	8.00	10.00	10.00	123219
.09/10	0.0134	0.79	1	123053	10.00	12.00	10.00	123220
.09/12	0.0134	0.66	1	123053	12.00	14.00	10.00	123221
.09/14	0.0134	0.58	1	123053	14.00	16.00	10.00	123222
.09/16	0.0134	0.51	1	123053	16.00	18.00	10.00	123223
.09/18	0.0134	0.45	1	123053	18.00	20.00	10.00	123224
.09/20	0.0134	0.41	1	123053	20.00	22.00	10.00	123225
.09/22	0.0134	0.38	1	123053	22.00	24.00	10.00	123226
.09/24	0.0134	0.35	1	123053	24.00	26.00	10.00	123227
.09/26	0.0134	0.32	1	123053	26.00	28.00	10.00	123228
.09/28	0.0134	0.30	1	123053	28.00	30.00	10.00	123229
.12/08	0.0155	1.28	1	123054	8.00	10.00	10.00	1030649
.14/10	0.0167	1.22	1	123054	10.00	12.00	10.00	123230
.14/12	0.0167	1.03	1	123054	12.00	14.00	10.00	123231
.14/14	0.0167	0.90	1	123054	14.00	16.00	10.00	123232
.14/16	0.0167	0.79	1	123054	16.00	18.00	10.00	123233
.14/18	0.0167	0.71	1	123054	18.00	20.00	10.00	123234
.14/20	0.0167	0.64	1	123054	20.00	22.00	10.00	123235
.14/22	0.0167	0.58	1	123054	22.00	24.00	10.00	123236
.14/24	0.0167	0.54	1	123054	24.00	26.00	10.00	123237
.20/08	0.0200	2.13	1	123055	8.00	10.00	10.00	123246
.20/10	0.0200	1.75	1	123055	10.00	12.00	10.00	123272
.20/12	0.0200	1.48	1	123055	12.00	14.00	10.00	123238
FOOTNOTES: Ct = Close tolerance flow; 1 = Type 1 Carbide								

Continued on next page

© 2013 Nordson Corporation
All rights reserved

Prism Airless and Air-Assisted Airless Automatic Spray Guns

Reference Size Flow/Pattern Width	Equivalent Diameter (in.)	Relative Film Build	Foot-notes	Pre-atomization Device (P/N)	Pattern Test			Part Number
					Min (in.)	Max (in.)	Distance	
.20/14	0.0200	1.28	1	123055	14.00	16.00	10.00	123239
.20/16	0.0200	1.13	1	123055	16.00	18.00	10.00	123240
.20/18	0.0200	1.01	1	123055	18.00	20.00	10.00	123241
.20/20	0.0200	0.91	1	123055	20.00	22.00	10.00	123242
.20/22	0.0200	0.83	1	123055	22.00	24.00	10.00	123243
.20/24	0.0200	0.77	1	123055	24.00	26.00	10.00	123244
.20/26	0.0200	0.71	1	123055	26.00	28.00	10.00	123245
.25/12	0.0224	1.85	1	123056	12.00	14.00	10.00	123273
.25/14	0.0224	1.60	1	123056	14.00	16.00	10.00	123274
.30/12	0.0245	2.22	1	123056	12.00	14.00	10.00	123247
.30/14	0.0245	1.92	1	123056	14.00	16.00	10.00	123248
.30/16	0.0245	1.69	1	123056	16.00	18.00	10.00	123249
.30/18	0.0245	1.52	1	123056	18.00	20.00	10.00	123250
.30/20	0.0245	1.37	1	123056	20.00	22.00	10.00	123251
.30/22	0.0245	1.25	1	123056	22.00	24.00	10.00	123252
.30/24	0.0245	1.15	1	123056	24.00	26.00	10.00	123253
.30/26	0.0245	1.07	1	123056	26.00	28.00	10.00	123254
.30/28	0.0245	0.99	1	123056	28.00	30.00	10.00	123255
.45/14	0.0300	2.88	1	*122481	14.00	16.00	10.00	123256
.45/16	0.0300	2.54	1	*122481	16.00	18.00	10.00	123257
.45/18	0.0300	2.27	1	*122481	18.00	20.00	10.00	123258
.45/20	0.0300	2.06	1	*122481	20.00	22.00	10.00	123259
.45/22	0.0300	1.88	1	*122481	22.00	24.00	10.00	123260
.45/24	0.0300	1.73	1	*122481	24.00	26.00	10.00	123261
.45/26	0.0300	1.60	1	*122481	26.00	28.00	10.00	123262
.45/28	0.0300	1.49	1	*122481	28.00	30.00	10.00	123263
FOOTNOTES: Ct = Close tolerance flow; 1 = Type 1 Carbide								

*122481 is the gasket.

© 2013 Nordson Corporation
All rights reserved

Prism Airless and Air-Assisted Airless Automatic Spray Guns

Dome Nozzle Selection Guide

- Blank nozzle gasket P/N 122481 is available to eliminate the use of a restrictor when desired. See "Filter Screen, Turbulence Plate and Restrictor Selection Chart" on page A37 in the *Nordson Airless Nozzle Catalog*.

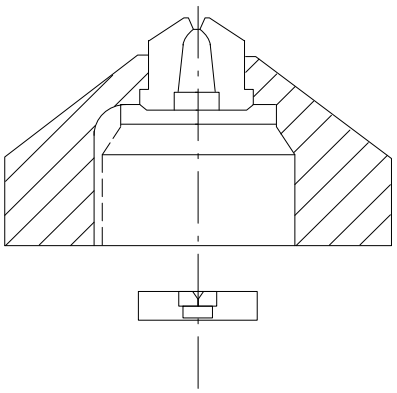

Prism Dome Nozzle

Reference Size Flow/Pattern Width	Equivalent Diameter (in.)	Relative Film Build	Foot-notes	Pre-atomization Device (P/N)	Pattern Test			Part Number
					Min (in.)	Max (in.)	Distance	
.03/02	0.0077	0.96	1	123050	2.00	4.00	10.00	123525
.03/04	0.0077	0.58	1	123050	4.00	6.00	10.00	123526
.03/06	0.0077	0.41	1	123050	6.00	8.00	10.00	123527
.03/08	0.0077	0.32	1	123050	8.00	10.00	10.00	123528
.04/02	0.0089	1.28	1	123051	2.00	4.00	10.00	123529
.04/04	0.0089	0.77	1	123051	4.00	6.00	10.00	123530
.04/06	0.0089	0.55	1	123051	6.00	8.00	10.00	123531
.04/08	0.0089	0.43	1	123051	8.00	10.00	10.00	123532
.04/10	0.0089	0.35	1	123051	10.00	12.00	10.00	123533
.06/02	0.0110	1.92	1	123052	2.00	4.00	10.00	123534
.06/04	0.0110	1.15	1	123052	4.00	6.00	10.00	123535
.06/06	0.0110	0.82	1	123052	6.00	8.00	10.00	123536
.06/08	0.0110	0.64	1	123052	8.00	10.00	10.00	123537
.06/10	0.0110	0.52	1	123052	10.00	12.00	10.00	123538
.06/12	0.0110	0.44	1	123052	12.00	14.00	10.00	123539
.09/02	0.0134	2.88	1	123053	2.00	4.00	10.00	123540
.09/04	0.0134	1.73	1	123053	4.00	6.00	10.00	123541
FOOTNOTES: Ct = Close tolerance flow; 1 = Type 1 Carbide								

Continued on next page

© 2013 Nordson Corporation
All rights reserved

Prism Airless and Air-Assisted Airless Automatic Spray Guns

Reference Size Flow/Pattern Width	Equivalent Diameter (in.)	Relative Film Build	Foot-notes	Pre-atomization Device (P/N)	Pattern Test			Part Number
					Min (in.)	Max (in.)	Distance	
.09/06	0.0134	1.23	1	123053	6.00	8.00	10.00	123542
.09/08	0.0134	0.96	1	123053	8.00	10.00	10.00	123543
.09/10	0.0134	0.79	1	123053	10.00	12.00	10.00	123544
.09/12	0.0134	0.66	1	123053	12.00	14.00	10.00	123545
.09/14	0.0134	0.58	1	123053	14.00	16.00	10.00	123546
.14/02	0.0167	4.48	1	123054	2.00	4.00	10.00	123547
.14/04	0.0167	2.69	1	123054	4.00	6.00	10.00	123548
.14/06	0.0167	1.92	1	123054	6.00	8.00	10.00	123549
.14/08	0.0167	1.49	1	123054	8.00	10.00	10.00	123550
.14/10	0.0167	1.22	1	123054	10.00	12.00	10.00	123551
.14/12	0.0167	1.03	1	123054	12.00	14.00	10.00	123552
.14/14	0.0167	0.90	1	123054	14.00	16.00	10.00	123553
.14/16	0.0167	0.79	1	123054	16.00	18.00	10.00	123554
.20/04	0.0200	3.84	1	123055	4.00	6.00	10.00	123555
.20/06	0.0200	2.74	1	123055	6.00	8.00	10.00	123556
.20/08	0.0200	2.13	1	123055	8.00	10.00	10.00	123557
.20/10	0.0200	1.75	1	123055	10.00	12.00	10.00	123558
.20/12	0.0200	1.48	1	123055	12.00	14.00	10.00	123559
.20/14	0.0200	1.28	1	123055	14.00	16.00	10.00	123560
.20/16	0.0200	1.13	1	123055	16.00	18.00	10.00	123561
.20/18	0.0200	1.01	1	123055	18.00	20.00	10.00	123562
.30/06	0.0245	4.11	1	123056	6.00	8.00	10.00	123563
.30/08	0.0245	3.20	1	123056	8.00	10.00	10.00	123564
.30/10	0.0245	2.62	1	123056	10.00	12.00	10.00	123565
.30/12	0.0245	2.22	1	123056	12.00	14.00	10.00	123566
.30/14	0.0245	1.92	1	123056	14.00	16.00	10.00	123567
.30/16	0.0245	1.69	1	123056	16.00	18.00	10.00	123568
FOOTNOTES: Ct = Close tolerance flow; 1 = Type 1 Carbide								

Continued on next page

© 2013 Nordson Corporation
All rights reserved

Prism Airless and Air-Assisted Airless Automatic Spray Guns

Dome Nozzle Selection Guide *(contd)*

Reference Size Flow/Pattern Width	Equivalent Diameter (in.)	Relative Film Build	Foot-notes	Pre-atomization Device (P/N)	Pattern Test			Part Number
					Min (in.)	Max (in.)	Distance	
.30/18	0.0245	1.52	1	123056	18.00	20.00	10.00	123569
.45/08	0.0300	4.80	1	*122481	8.00	10.00	10.00	123570
.45/10	0.0300	3.93	1	*122481	10.00	12.00	10.00	123571
.45/12	0.0300	3.32	1	*122481	12.00	14.00	10.00	123572
.45/14	0.0300	2.88	1	*122481	14.00	16.00	10.00	123573
.45/16	0.0300	2.54	1	*122481	16.00	18.00	10.00	123574
.45/18	0.0300	2.27	1	*122481	18.00	20.00	10.00	123575
.45/20	0.0300	2.06	1	*122481	20.00	22.00	10.00	123576
.45/22	0.0300	1.88	1	*122481	22.00	24.00	10.00	123577
FOOTNOTES: Ct = Close tolerance flow; 1 = Type 1 Carbide								

*122481 is the gasket.

© 2013 Nordson Corporation
All rights reserved

Non-Electrostatic Accessories

Description

The following products are accessories for your non-electrostatic guns.

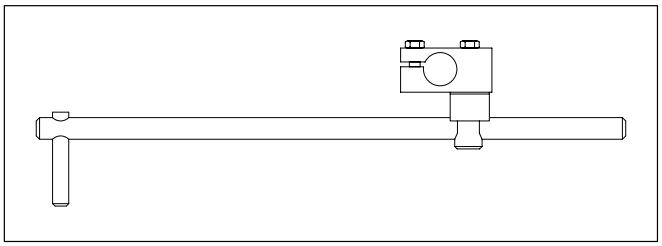

Gun Mounting Bar

The gun mounting bar consists of an arm, a mounting rod, and a mounting bracket. The adjustable mounting bracket has a clamp screw and swivel for connecting the assembly to a 2.54-cm (1-in.) OD pipe or rod. Adjustments of 360 degrees allow the gun mounting bar to be used for most airless and air spray guns.

Part	Description
249160	Bar, gun mounting, 36-in
1602271	Bar, gun mounting, 18-in

Unvalved Straight-Flanged Mount Nozzle Extensions for A4B and A7A Guns, Brass

Part	Description
	Standard
040004	102 mm (4 in.)
040006	152 mm (6 in.)
040012	305 mm (12 in.)
040024	610 mm (24 in.)

© 2013 Nordson Corporation
All rights reserved

© 2013 Nordson Corporation
All rights reserved

Section 3
Rotary Atomizers

RA-20 Rotary Atomizer 3-1
Description 3-1
Features 3-1
Specifications 3-2
Ordering Information 3-3

RA-20R Rotary Atomizer 3-7
Description 3-7
Features 3-7
Specifications 3-8
Dimensions 3-8
Turbine, Fluid, and Air Specifications 3-8
Ordering Information 3-9

© 2012 Nordson Corporation
All rights reserved

Table of Contents

© 2012 Nordson Corporation
All rights reserved

RA-20 Rotary Atomizer

Description

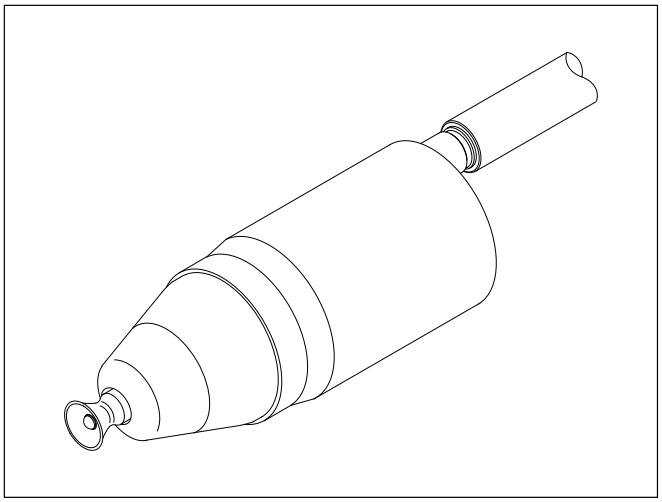

The Nordson model RA-20 rotary atomizer is an air-bearing, turbine-driven, electrostatic spray device. The RA-20 rotary atomizer achieves fine finishes and is ideal for applying decorative and protective finishes using most coating materials, including high solids, metallics, and waterbornes. The RA-20 rotary atomizer features wide pattern adjustability and has a long life, air-bearing turbine. It is designed to be a safe, non-sparking electrostatic spray device. The high rotating speed of the RA-20 rotary atomizer provides fine atomization. Vector air controls the fan pattern, allowing recessed portions of the part to receive coating material. Enhanced distribution design allows for higher flow rates.

The RA-20 rotary atomizer uses a durable, non-conductive composite cup. The unique aerodynamic shape of the cup is designed to spray 100 percent solid coatings and most waterborne materials with easy clean up. The patented edge helps to prevent air entrapment. The inherently-safe RA-20 rotary atomizer can be positioned as close as 5.08 cm (2 in.) from the part being coated.

Features

- Non-incendive
- Compact size
- Durable, non-conductive cup body
- Close-in spraying capability
- Application-driven, configurable values
- Enhanced cup cleanability
- Internal or external power supply versions
- Waterborne compatible
- Magnetic pick-up, fiber-optic turbine speed sensor
- FM, CSA, CE approved

© 2013 Nordson Corporation
All rights reserved

RA-20 Rotary Atomizer

Specifications

NOTE: All specifications are calculated without including the mounting stem.

Dimensions, mm (in.)	
Length	428 (16.88)
Diameter	164 (6.44)
Weight, kg (lb)	
Cable version	4.7 (10.36)
IPS version	5.3 (11.68)
Waterborne	4.4 (9.7)
Turbine Speed, rpm	5,000–45,000
Vector Air	254 l/min @ 2.7 bar (9 scfm @ 40 psi) 510 l/min @ 5.5 bar (18 scfm @ 80 psi)
Fluid Delivery	
Feed type	Center feed
Maximum fluid flow @ 130 centipoise	1500 cc/min @ 7 bar (50 oz/min @ 100 psi)
Fluid pressure	0.34–7 bar (5–100 psi)
Spray pattern size(1), mm (in.)	203–609 (8–42)
Air Requirements	
Bearing air pressure, bar (psi)	
Minimum	4.8 (70)
Recommended	5.5–7 (80–100)
Bearing air consumption	70 l/min @ 5.5 bar (2.5 scfm @ 80 psi)
Turbine air consumption (unloaded)	283 l/min (10 scfm) @ 40,000 rpm

(1) Spray pattern size is dependent upon fluid pressure, turbine speed, material viscosity, and many other variables.

© 2013 Nordson Corporation
All rights reserved

Ordering Information

Part	Description	Note
	RA-20 Rotary Atomizers	
295359	Internal Power Supply (IPS)	
295360	High-voltage cable	
295361	Waterborne	
	Power Supplies and Cables	
142109	Cable, 16-m (50-ft), (IPS version only)	A
181730	Extension cable, 5-m (15-ft) (IPS version only)	A
184260	Power supply, EPS-9, current limiter	B
229934	Power supply, EPS-6, 120/240	C
302144	Cable, IFC, 16 m, RA-20	B
1083504	Power supply, IPS-20, automatic	A
	Valves	
295408	Solvent valve	
295409	RA-20 dump valve/RA-20R trigger	
295410	Dump and solvent valve	
302134	Paint/solvent valve (optional)	
302135	RA-20 dump valve/RA-20R trigger (valve only)	
	Kits	
295354	Valve, packing cartridge	
295381	Seal	
220639	Turbine, air-bearing (all versions)	
295393	Valve repair	
302136	Piston valve assembly	
1020756	Pattern control	

NOTE A: Used with IPS RA-20
NOTE B: Used with high voltage cable RA-20
NOTE C: Used with waterborne RA-20

© 2013 Nordson Corporation
All rights reserved

RA-20 Rotary Atomizer

Ordering Information *(contd)*

Part	Description	Note
	Fluid Tubes	
168671	Fluid tube, 0.254-cm (.0100-in.) diameter hole, stainless steel	
181761	Fluid tube, 0.408-cm (0.161-in.) diameter hole, stainless steel	
	Manifold	
295338	Manifold, 2 valve	
	Multiplier	
183784	Multiplier assembly	
	Fiber Optics	
167917	Fiber optic resistor	
227169	Transmitter assembly, visible	
227173	Fiber optic sensor	
247730	Fiber optic kit	
295379	Fiber optic cable, 38 ft	
	RPM Indicators	
132440	RPM indicator, 120 Vac	A
132441	RPM indicator, 230 Vac	A
236597	Module, fiber optic, automatic	
237602	Module, fiber optic, manual (open loop)	
	Miscellaneous Accessories	
1087229	Non-conductive fluid regulator	
137526	Mounting stand	
169649	Bag, elasticized cover	
220640	Charge ring	
230921	Charge ring, with resistors	
NOTE A: The RPM indicators provide a turbine speed display.		

© 2013 Nordson Corporation
All rights reserved

RA-20 Rotary Atomizer

Part	Description	Note
	Cups, and Distributors	
321330	2-in. diameter, microfin assembly	
302126	2-in. diameter, with fins, pads, assembly	
302127	2-in. diameter, without fins, pads, assembly	
321331	2-in. diameter, microfin, assembly	
302130	2.5-in. diameter, with fins, pads, assembly	
302131	2.5-in. diameter, without fins, pads, assembly	
335289	1.5-in. diameter, with fins, pads, tap, assembly	
335301	1.5-in. diameter without fins, pads, tap, assembly	
295369	Distributor cup, standard	
295390	Distributor cup, emulsion	
339733	2-in. diameter, microfin, pad, premium finish	A
339730	Retainer/distributor, premium finish	A
339731	Fluid nozzle, 0.090-in. diameter, premium finish	A
	Nozzles, in.	
295382	0.020	
295383	0.030	
295384	0.040	
295385	0.050	
295386	0.062	
295387	0.070	
295388	0.080	
339731	0.090	A

NOTE A: Premium finish cup, part 339733 must be used with premium finish nozzle, part 339731, and premium finish retainer/distributor, part 339730.

© 2013 Nordson Corporation
All rights reserved

RA-20 Rotary Atomizer

Part	Description	Note
	Shaping Bar	
134620	Bar, shaping, ESB-100	
134749	Kit, installation, shaping bar	

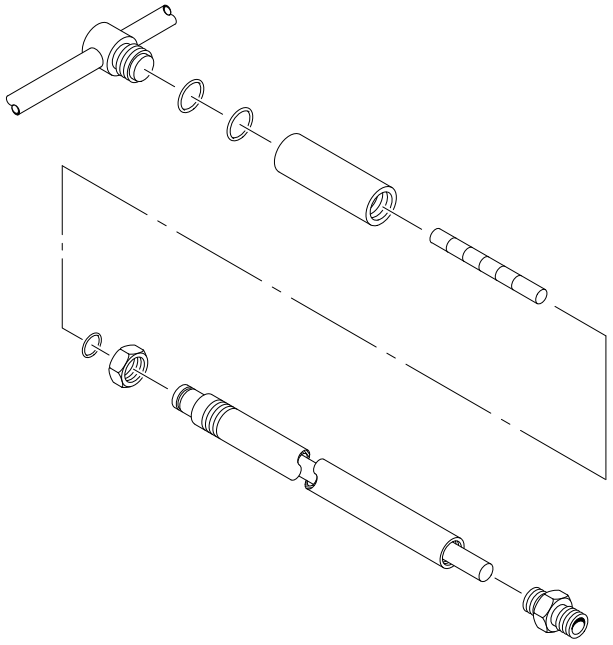

Shaping Bar

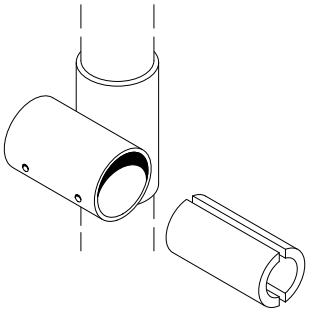

Shaping Bar Installation Kit

© 2013 Nordson Corporation
All rights reserved

RA-20R Rotary Atomizer

Description

The Nordson model RA-20R rotary atomizer is an electrostatic spray device incorporating an air-powered turbine and is used with robotic equipment. It can apply most solvent and waterborne coating materials, including high solids and metallics. The fine atomization and soft spray apply thin, controllable film builds with minimal paint bounceback. The RA-20R rotary atomizer achieves a superior finish, while running a more productive and cost-efficient painting operation. The RA-20R rotary atomizer features vector air for superior pattern shaping, long-life air-bearing turbine design, innovative electrostatic charging system, and a patented composite cup. This helps achieve maximum transfer efficiency with minimal paint waste. The RA-20R rotary atomizer is designed to be a safe, non-sparking electrostatic spray device.

The RA-20R rotary atomizer is available in several versions depending on robot type, spray material, and bracket angle. The unique aerodynamic shape of the cup is designed to spray 100 percent solid coatings and most waterborne materials with easy clean up. The patented edge helps to prevent air entrapment. The inherently-safe RA-20R rotary atomizer can be positioned as close as 5.08 cm (2 in.) from the part being coated.

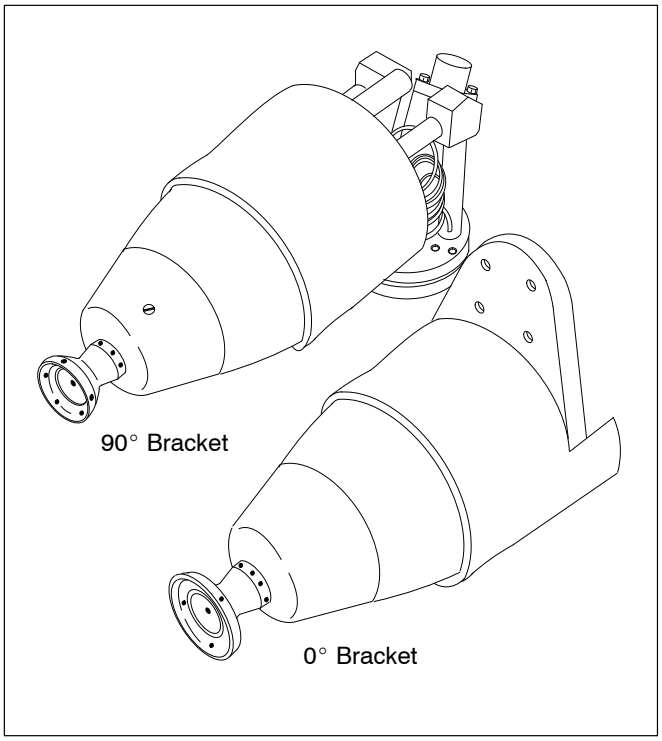

Features

- Non-incendive
- Compact size
- Durable, non-conductive cup body
- Close-in spraying capability
- Application-driven, configurable values
- Enhanced cup cleanability
- Internal or external power supply versions
- Waterborne compatible
- Magnetic pick-up, fiber-optic turbine speed sensor
- FM, CSA, CE approved

© 2013 Nordson Corporation
All rights reserved

RA-20R Rotary Atomizer

Specifications

Dimensions

	Waterborne Versions				Solventborne Versions			
Bracket Angle	**90°**	**60°**	**45°**	**0°**	**90°**	**60°**	**45°**	**0°**
Length, mm (in.)	432 (17.0)	459 (18.05)	497 (19.56)	327 (12.88)	470 (18.50)	497 (19.55)	532 (20.96)	381 (15.00)
Width, mm (in.)	191 (7.52)	209 (8.24)	216 (8.49)	237 (9.34)	191 (7.52)	209 (8.24)	216 (8.49)	237 (9.34)
Diameter, mm (in.)	164 (6.44)	164 (6.44)	164 (6.44)	164 (6.44)	164 (6.44)	164 (6.44)	164 (6.44)	164 (6.44)
Weight, kg (lb)	4.6 (10.22)	4.6 (10.07)	4.6 (10.15)	4.2 (9.16)	6.0 (13.28)	6.0 (13.13)	6.0 (13.21)	5.3 (11.61)
Bracket Angle	**90°**	**60°**	**45°**	**0°**	**90°**	**60°**	**45°**	**0°**
Center of Gravity L_t, mm (in.)	171 (6.74)	183 (7.21)	241 (9.48)	88 (3.45)	179 (7.04)	186 (7.32)	245 (9.66)	93 (3.67)
L_v, mm (in.)	108 (4.24)	135 (5.33)	112 (4.41)	111 (4.38)	106 (4.19)	143 (5.61)	118 (4.65)	112 (4.40)

Turbine, Fluid, and Air Specifications

Turbine Speed, rpm	5,000–45,000
Vector Air	254 l/min @ 2.7 bar (9 scfm @ 40 psi) 510 l/min @ 5.5 bar (18 scfm @ 80 psi)
Fluid Delivery	
Feed type	Center feed
Maximum fluid flow @ 130 centipoise	1500 cc/min @ 7 bar (50 oz/min @ 100 psi)
Fluid pressure	0.34–7 bar (5–100 psi)
Spray pattern size(1), mm (in.)	203–1067 (8–42)
Air Requirements	
Bearing air pressure, bar (psi)	
Minimum	4.8 (70)
Recommended	5.5–7 (80–100)
Brake air pressure	Plant supply pressure
Bearing air consumption	70 l/min @ 5.5 bar (2.5 scfm @ 80 psi)
Turbine air consumption (unloaded)	283 l/min (10 scfm) @ 40,000 rpm

(1) Spray pattern size is dependent upon fluid pressure, turbine speed, material viscosity, and many other variables.

© 2013 Nordson Corporation
All rights reserved

Ordering Information

Part	Description	Note
	RA-20R Rotary Atomizers — Waterborne	
304424	Waterborne, 0°	
308996	Waterborne, 45°	
308994	Waterborne, 60°	
304422	Waterborne, 90°	
	RA-20R Rotary Atomizers — Solventborne	
304423	Solventborne, 0°	
308995	Solventborne, 45°	
308993	Solventborne, 60°	
304421	Solventborne, 90°	
	Power Supplies and Cables	
1083504	Power supply, IPS-20, automatic	A
229934	Power supply, EPS-6, 120/240	B
142109	Cable, 16-m (50 ft) (IPS versions only)	A
181730	Extension cable, 5-m (15 ft) (IPS versions only)	A
	Valves	
295408	Solvent valve	
295409	RA-20 dump valve/RA-20R trigger	
295410	Dump and solvent valve	
302134	Paint/solvent valve (optional)	
302135	RA-20 dump valve/RA-20R trigger (valve only)	
	Kits	
220639	Turbine, air-bearing (all versions)	
295354	Valve, packing cartridge	
295393	Valve repair	
295381	Seal	
302136	Piston valve assembly	
1020756	Pattern control	

NOTE A: Use with solventborne systems.
NOTE B: Use with waterborne systems.

© 2013 Nordson Corporation
All rights reserved

RA-20R Rotary Atomizer

Ordering Information *(contd)*

Part	Description	Note
	Fluid Tubes	
168671	Fluid tube, 0.254-cm (.0100-in.) dia hole, stainless steel	
181761	Fluid tube, 0.408-cm (0.161-in.) dia hole, stainless steel	
	Multiplier	
183784	Multiplier assembly	
	Fiber Optics	
167917	Fiber optic resistor	
227169	Transmitter assembly, visible	
227173	Fiber optic sensor	
247730	Fiber optic kit	
295379	Fiber optic cable	
	Speed Controller and RPM Indicators	
132440	RPM indicator, 120 Vac	A
132441	RPM indicator, 230 Vac	A
236597	Module, fiber optic, automatic	
237602	Module, fiber optic, manual (open loop)	
	Miscellaneous Accessories	
1087229	Non-conductive fluid regulator	
169649	Bag, elasticized cover	
220640	Charge ring	
230921	Charge ring, with resistors	
NOTE A: The RPM indicators provide a turbine speed display.		

© 2013 Nordson Corporation
All rights reserved

RA-20R Rotary Atomizer

Part	Description	Note
	Cups, and Distributors	
321330	2-in. diameter, microfin assembly	
302126	2-in. diameter, with fins, pads, assembly	
302127	2-in. diameter, without fins, pads, assembly	
321331	2-in. diameter, microfin, assembly	
302130	2.5-in. diameter, with fins, pads, assembly	
302131	2.5-in. diameter, without fins, pads, assembly	
335289	1.5-in. diameter, with fins, pads, tap, assembly	
335301	1.5-in. diameter without fins, pads, tap, assembly	
295369	Distributor cup, standard	
295390	Distributor cup, emulsion	
339733	2-in. diameter, microfin, pad, premium finish	B
339730	Retainer/distributor, premium finish	B
339731	Fluid nozzle, 0.090-in. diameter, premium finish	B
	Nozzles, in.	
295382	0.020	
295383	0.030	
295384	0.040	
295385	0.050	
295386	0.062	
295387	0.070	
295388	0.080	
339731	0.090	B

NOTE B: Premium finish cup, part 339733 must be used with premium finish nozzle, part 339731, and premium finish retainer/distributor, part 339730.

© 2013 Nordson Corporation
All rights reserved

© 2013 Nordson Corporation
All rights reserved

Section 4
Liquid Pumps

General Information **4-1**
Description 4-1
Pump Comparison 4-1
Pump Performance 4-2
Pump Packing and Solvent Chamber Fluid Guide 4-5
Solvent Precautions 4-6
Solvent Chamber Fluid Types (packing lubricant) 4-6
Packing Gland Types 4-6
Ordering Information 4-7

25B Pump **4-9**
Description 4-9
2:1 and 4:1 4-9
16:1 4-9
27:1 4-9
Features 4-9
Specifications 4-10
Ordering Information 4-11
Standard Packing Glands 4-12

64B Pump **4-13**
Description 4-13
Features 4-13
Specifications 4-14
Ordering Information 4-15
Standard Packing Glands 4-16

PermaFlo Series Pumps **4-17**
Description 4-17
Features 4-17
Specifications 4-18
Ordering Information 4-19
815 and 830 Series Pumps 4-19
815 Pump Packing Gland Kits 4-19
830 Pump Packing Gland Kits 4-20
Air Motor Service Kits 4-20
Hydraulic Section Kits 4-20

© 2013 Nordson Corporation
All rights reserved

Table of Contents

StediFlo Low to Medium Pressure Pumps 4-21
Description 4-21
Features and Benefits 4-21
Specifications 4-22
Ordering Information 4-23

StediFlo Medium to High Pressure Pumps 4-25
Description 4-25
Features and Benefits 4-25
Specifications 4-26
Ordering Information 4-27

Pump Accessories 4-29
Description 4-29
Ordering Information 4-29

180D/360D Pumps 4-31
Description 4-31
Specifications 4-32
Ordering Information 4-33
Standard Packing Glands 4-34

© 2013 Nordson Corporation
All rights reserved

General Information

Description

The following charts contain information on available Nordson Liquid pumps.

Pump Comparison

Pump	Part	Fluid-to-Air Ratio	Wetted Material	Standard Packing Type	Air Cylinder Diameter, in.	Fluid Flow @ 60 cpm, gpm
25B	247536	2:1	Plated steel	U	$3^1/_4$	6.0
	1077620	2:1	Plated steel	F	$3^1/_4$	6.0
	247537	4:1	Plated steel	U	$3^1/_4$	3.0
	1077621	4:1	Plated steel	F	$3^1/_4$	3.0
	245556	16:1	Aluminum	U	$3^1/_4$	0.8
	1077622	16:1	Aluminum	F	$3^1/_4$	0.8
	247238	16:1	Stainless steel	U	$3^1/_4$	0.8
	1077623	16:1	Stainless steel	F	$3^1/_4$	0.8
	149570	16:1	Stainless steel	G	$3^1/_4$	0.8
	245555	27:1	Aluminum	U	$3^1/_4$	0.5
	1077624	27:1	Aluminum	F	$3^1/_4$	0.5
	247062	27:1	Stainless steel	U	$3^1/_4$	0.5
	1077652	27:1	Stainless Steel	F	$3^1/_4$	0.5
64B	244766	15:1	Aluminum	F	$4^1/_2$	2.0
	247027	15:1	Stainless steel	F	$4^1/_2$	2.0
	244773	30:1	Aluminum	F	$4^1/_2$	1.0
	247028	30:1	Stainless steel	F	$4^1/_2$	1.0
PermaFlo 815	1024648	15:1	Stainless steel	U	8	8.0
	1602026	15:1	Stainless steel	F	8	8.0
	1065204	15:1	Stainless steel	F	8	8.0
	1085453	15:1	Stainless steel	D	8	8.0
PermaFlo 830	1023362	30:1	Stainless steel	U	8	4.0
	1602027	30:1	Stainless steel	F	8	4.0
	1065202	30:1	Stainless steel	F	8	4.0
	1085452	30:1	Stainless steel	D	8	4.0

Continued…

© 2013 Nordson Corporation
All rights reserved

General Information

StediFlo	1601703	3:1	Stainless steel	F		4.8
	1601704	6:1	Stainless steel	F		4.8
	1601705	8:1	Stainless steel	F		1.2
	1601706	12:1	Stainless steel	F		4.8
	1601681	10:1	Stainless steel	F	2.0	0.2
	1601688	18:1	Stainless steel	F	4.1	0.58
	1601689	32:1	Stainless steel	F	5.5	0.58
	1601692	57:1	Stainless steel	F	13.1	2.86

© 2013 Nordson Corporation
All rights reserved

Pump Performance

Pump	Fluid-to-Air Ratio	Air Motor		Min. ID Air Line	Air Consumption (scfm)	Max. Fluid Working	Fluid Flow, gpm			Cycles per	Gallons per
		Diameter, in.	Stroke Length, in.	Size, in.	@ 15 cpm Air Temp 60° F 50 psi	Pressure, bar (psi)	@ 15 cpm	@ 30 cpm	@ 60 cpm	Gallon	Cycle
25B	2:1	3.25	3.0	3/8	1.9	14 (200)	1.50	3.00	6.00	10.0	0.100
	4:1	3.25	3.0	3/8	1.9	28 (400)	0.75	1.50	3.00	20.0	0.050
	16:1	3.25	3.0	3/8	1.9	110 (1600)	0.20	0.40	0.80	77.0	0.013
	27:1	3.25	3.0	3/8	1.9	186 (2700)	0.12	0.24	0.48	125.0	0.008
64B	15:1	4.50	4.0	1/2	4.9	103 (1500)	0.50	1.02	2.04	31.0	0.032
	30:1	4.50	4.0	1/2	4.9	207 (3000)	0.25	0.51	1.02	59.0	0.017
PermaFlo 815	15:1	8.0	4.7	3/4	18.1	103 (1500)	2.04	4.08	8.16	7.0	0.136
PermaFlo 830	30:1	8.0	4.7	3/4	18.1	206 (3000)	0.98	1.96	3.92	15.0	0.065
StediFlo	3:1	4.13	4.7	3/4	4.5	24 (348)	2.40	4.80	9.60	6.25	0.16
	6:1	5.50	4.7	3/4	7.9	48 (696)	2.40	4.80	9.60	6.25	0.16
	8:1	4.13	3.0	3/4	2.7	64 (928)	0.60	1.20	2.40	25.0	0.04
	12:1	7.87	4.7	1	15.9	84 (1218)	2.40	4.80	9.60	6.25	0.16
	10:1	2.0	3.0	3/8	0.7	80 (1160)	0.10	0.20	0.40	143.0	0.007
	18:1	5.50	3.0	3/8	4.8	144 (2088)	0.29	0.58	1.16	50	0.02
	32:1	5.50	3.0	3/8	4.8	256 (3712)	0.29	0.58	1.16	50	0.02
	57:1	13.10	4.7	1	42.4	399 (5787)	1.43	2.86	5.60	10	0.10

(1) Complete pump assemblies are obsolete and replaced by PermaFlo pumps. For reference purposes only.

2013 Nordson Corporation
All right reserved

2013 Nordson Corporation
All right reserved

Pump Packing and Solvent Chamber Fluid Guide

Other packing types are available for special applications. Contact your Nordson Corporation representative for more information.

MATERIAL TYPE	SOLVENT FAMILY	ABRASIVE QUALITY	PACKING TYPE	SOLVENT FLUID
Waterborne	Water	Mild	D	T, Q
		Medium	G	T, Q
		High	U	T, Q
	Alcohols	Mild	D	T, Q
		Medium	G	T, Q
		High	U	T, Q
Solventborne	Ketones (e.g., acetone, MEK, MAK, etc.)	Mild	F, L	K, S
		Medium	F, L	K, S
		High	U	K, S
	Aromatic Hydrocarbons (e.g., xylene, toluene, etc.)	Mild	F, L	K, S
		Medium	F, L	K, S
		High	F, U(1)	K, S
	Alcohols	Mild	D	K, Q
		Medium	G	T, Q
		High	U	K, Q
	Aliphatic Petroleum Naphthas	Mild	D	K, S
		Medium	D	K, S
		High	G	T, Q
	Chlorinated Solvents	Mild	F, L	K, S
		Medium	F, L	K, S
		High	F, L	K, S

(1) Some swelling may occur when using Type-U packings with aromatic hydrocarbons.

© 2013 Nordson Corporation
All rights reserved

General Information

Solvent Precautions

- Some oils contain very strong solvents. Obtain information about the oil solvent content before selecting the packing gland.
- Most standard packing gland housings are made of aluminum. Do not use halogenated hydrocarbon solvents with aluminum components.
- Most metal-etching primers require stainless steel system components. Do not use packing glands that have aluminum housings in stainless steel pumps.

Obtain the following information before contacting a Nordson representative for selecting a packing gland:

- Coating material specifications and Material Safety Data Sheets (MSDS)
- Clean-up solvent and procedures
- Pump stroking rate and system operating pressure and temperature
- Operating hours per day

Solvent Chamber Fluid Types (packing lubricant)

Solvent Type	Material	Applications
T	Mixed propylene glycol	Use for waterborne systems. (Thinner than Type-Q and best used on smaller pump models.)
Q	Liquid anionic flocculant mixed with distilled water.	Use for waterborne systems. (Thicker than Type-T and best used on larger pump models.)
K	Epoxidized soybean oil	Use for all airless pump models except for waterborne and catalyzed, alkyd urea applications.
S	Mixed aliphatic dimethyl esters	Use for airless pump models except for waterborne applications.

Packing Gland Types

Packing Type	Material	Applications
A	Cotton duck saturated with buna-nitrile and coated with graphite	Good for less abrasive applications where strong solvents are not used. Contains graphite coating to reduce friction.
D	Cotton duck and synthetic fabric saturated with buna-nitrile and PTFE	Good for less abrasive applications where strong solvents are not used. Contains PTFE to reduce friction.
F	PTFE V-rings stacked with leather V-rings	Most commonly used packing in the finishing industry. Use for strong solvents and abrasive materials.
G	Polyurethane U-cups	Frequently used with waterborne materials. Not compatible with some solvents.(1)
L	Ultra-high molecular weight polyethylene (UHMWPE) V-rings stacked with leather V-rings	Good for varnishes and other thin, non-pigmented materials.(2)
U	Ultra-high molecular weight polyethylene (UHMWPE)	Good for highly abrasive materials. Compatible with waterborne and most solventbornes.(3)

(1) Do not use Type-G packing glands with aromatic hydrocarbon solvents or with Type-K and Type-S solvent chamber fluids.

(2) Only available for PermaFlo pumps.

(3) Slight swelling may occur with Type-U packings when exposed to aromatic hydrocarbon solvents.

© 2013 Nordson Corporation
All rights reserved

Ordering Information

NOTE: Type-K solvent chamber fluid is highly viscous. At room temperature, it is not appropriate for use in Model 25B or 64B pumps where the solvent chamber filling procedures require the fluid to flow through narrow passages.

Part	Description
	Type-K Solvent Chamber Fluid
900255	0.95 l (1 qt)
	Type-Q Solvent Chamber Fluid
244854	Concentrate, (2.6 oz bottle)
	Type-S Solvent Chamber Fluid
248831	0.95 l (1 qt)
	Type-T Solvent Chamber Fluid
140029	0.95 l (1 qt)
	Vitalizer Oil
900214	0.47 l (1 pt)
900215	0.95 l (1 qt)
900216	3.8 l (1 gal)
900217	18.9 l (5 gal)

© 2013 Nordson Corporation
All rights reserved

© 2013 Nordson Corporation
All rights reserved

25B Pump

Description

The Nordson model 25B pump is a dual-acting, single-piston pump designed for use in circulating and non-circulating systems. The 25B pump is used for heated or unheated coating material spray systems and other fluid delivery applications, such as cold glue and adhesives. The pump is available in stainless steel for corrosive and waterborne applications. It can be mounted on a wall, drum, five-gallon pail, or dolly. The standard model 25B pump is not shipped with a mounting kit. For first time users, the mounting kit is a necessity as it contains parts critical to the operator. Refer to *Ordering Information* for a list of mounting kits.

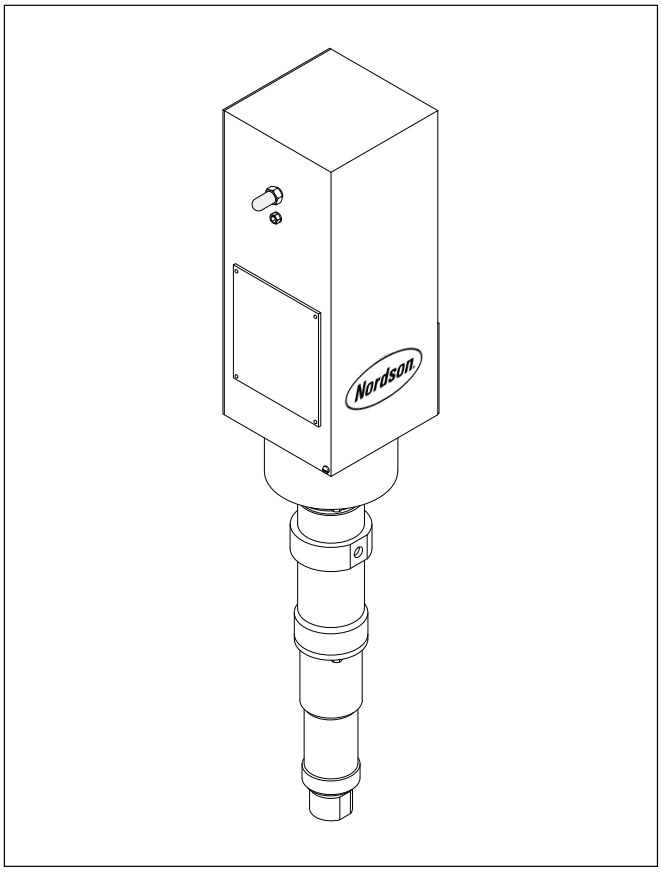

The model 25B pump is available in the following fluid-to-air ratios:

2:1 and 4:1

The 2:1 and 4:1 pumps are used for low-pressure, high-volume applications, including air-atomized coating material systems and are available in plated steel.

16:1

The 16:1 pump is a medium-pressure pump used for heated coating material and lower viscosity applications. This pump is suitable for the application of industrial enamel and is available in aluminum or stainless steel.

27:1

The 27:1 pump is for high-pressure, airless coating material applications where viscous primers and coatings are sprayed and is available in aluminum or stainless steel.

Features

- Positive-displacement, demand-type pump
- Dual-acting, single-piston design
- Used in circulating and non-circulating systems
- Self-adjusting hydraulic packing glands cannot be over-tightened
- Reciprocating plunger and stationary packing design
- Wide selection of standard packing materials
- Versatile mounting options
- Large, stainless steel ball checks for smooth fluid delivery of high-viscosity coating materials
- Large, enclosed solvent chamber for increased upper packing life
- Mechanical air valve for fast cycling action
- Sheet metal cover for protection from industrial environments
- Air-operated pump for safe use in hazardous locations with solventborne coatings
- Aluminum and stainless steel models available

© 2013 Nordson Corporation
All rights reserved

25B Pump

Specifications

Properties	Fluid-to-Air Pressure Ratio			
	2:1	4:1	16:1	27:1
Maximum Fluid Working Pressure, bar (psi)	14 (200)	28 (400)	110 (1600)	186 (2700)
Air Requirements(1), l/second (cfm)	1.85 (3.8)	1.85 (3.8)	1.85 (3.8)	1.85 (3.8)
Pump Cycles(2), cycles/l (cycles/gal)	2.5 (10)	5 (20)	20 (77)	33 (125)
Fluid Delivery(2), l/min (gpm)				
@ 15 cycles/min	5.68 (1.50)	2.84 (0.75)	0.76 (0.20)	0.45 (0.12)
@ 30 cycles/min	11.36 (3.00)	5.68 (1.50)	1.51 (0.40)	0.91 (0.24)
@ 60 cycles/min	22.71 (6.00)	11.36 (3.00)	3.03 (0.80)	1.82 (0.48)
l (gal) per cycle	0.400 (0.101)	0.200 (0.050)	0.050 (0.013)	0.030 (0.008)
Connections				
Air Inlet	$^3/_8$-in. NPT	$^3/_8$-in. NPT	$^3/_8$-in. NPT	$^3/_8$-in. NPT
Fluid Outlet				
Low Pressure	$^3/_8$-in. NPT	$^3/_8$-in. NPT	—	—
High Pressure	—	—	$^1/_4$-in. NPT	$^1/_4$-in. NPT
Minimum Air Line ID, mm (in.)	9.5 ($^3/_8$)	9.5 ($^3/_8$)	9.5 ($^3/_8$)	9.5 ($^3/_8$)

(1) Air requirements at 15 cycles, 4.14 bar (60 psig).

(2) One cycle = two strokes.

© 2013 Nordson Corporation
All rights reserved

Ordering Information

NOTE: All pumps are shipped with Type-U packings unless otherwise indicated. Model 25B pumps do not include air motor accessories or mounting kits. For first time users, the mounting kit is a necessity as it contains parts critical to the operator. Use the list below to choose a mounting kit for your 25B pump. To order other accessories for your pump, refer to *Pump Accessories* in this section.

Part	Description	Note
	Standard Pumps	
247536	2:1 plated steel pump	
247537	4:1 plated steel pump	
245556	16:1 aluminum pump	
247238	16:1 stainless steel pump	
245555	27:1 aluminum pump	
247062	27:1 stainless steel pump	
	Mounting Kits	
246730	Wall-mount standard 2:1 and 4:1	A
245552	Wall-mount standard 16:1 and 27:1	A
245554	Wall-mount for stainless steel 16:1 and 27:1	A
	Circulation Valve Kits	
244777	Standard, single	
244778	Stainless steel, single	
244779	Standard, dual	
244780	Stainless steel, dual	
	Air Motor Accessory Group	
1024722	Air motor accessory group, $^{3}/_{8}$ in.	B
	Dolly Frame	
245859	Small pump dolly	C

NOTE A: Mounting kits include siphon accessories, solvent chamber and fluid, miscellaneous connectors, elbows, and fittings.

B: Includes FRL (filter, regulator, lubricator) and all necessary hoses, fittings, oil, brackets, etc.

C: A wall-mounting kit is not included with the dolly or pump but is required.

© 2013 Nordson Corporation
All rights reserved

25B Pump

Standard Packing Glands

Use the following table to select the proper packing glands for your pump.

25B Ratio & Part	Packing	Packing Gland Type(2) with O-Rings				
		A	D	F	G	U
Plated Steel	Upper	247343	714619	246209	248048	333377
2:1	Lower					
247536	Kit	106361		106304	106389(1)	335377
Plated Steel	Upper	247344		246208	248049	333367
4:1	Lower					
247537	Kit	106360		106303	106390(1)	335379
Aluminum	Upper	503204	503221	245889	503216	333368
16:1	Lower	503208	503225	245890	503212	333371
245556	Kit	106106	106112	106292	106391(1)	335380
Stainless Steel	Upper	247245	248071	247244	248050	333369
16:1	Lower	247247	248070	247246	248051	333372
247238	Kit	1602414	1602415	1602416	106392(1)	335382
Aluminum	Upper	503104	503124	245891	248057	333379
27:1	Lower	503108	503125	245892	248056	333380
245555	Kit	106110	1602417	106293	106394(1)	335381
Stainless Steel	Upper		248073	247069		333381
27:1	Lower		248072	247068	248054	333382
247062	Kit		1602418	1602419	106394(1)	335383

(1) Spacer, U-cup, and O-ring kit. Kit does not include metal gland housings and retaining rings. Each kit contains spacer, U-cup, and O-rings for both upper and lower packing glands. When using the Type-G packing gland, you must reuse the housings from the previous packing gland.

(2) Refer to *Packing Gland Types* in this section for definition of materials.

© 2013 Nordson Corporation
All rights reserved

64B Pump

Description

The Nordson model 64B pump is a dual-acting, single-piston pump used in circulating and non-circulating systems. The 64B pump is available in 15:1 and 30:1 fluid-to-air ratios for use in airless and air-assisted airless applications. It is designed to operate multiple spray devices at mid-range volume or a single spray device in high-volume applications of high-viscosity materials. The 64B pump is suitable for abrasive coatings because of its lower cycle rates.

The pump is available in aluminum construction or stainless steel construction. The stainless steel construction can be used for corrosive materials. The 64B pump can be mounted on a wall or dolly. The standard model 64B pumps include an integral wall-mounting bracket.

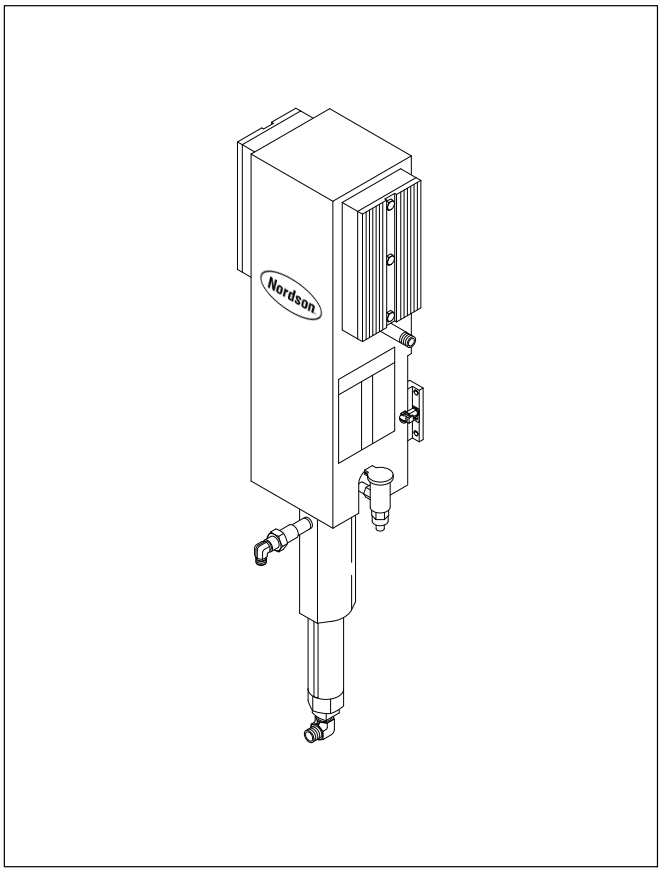

Features

- Positive-displacement, demand-type pump
- Available in 15:1 and 30:1 fluid-to-air ratios
- Used in airless and air-assisted airless applications
- Dual-acting, single-piston design
- Self-adjusting packing glands cannot be over-tightened
- Air-operated for safe use in hazardous locations with solventborne coatings
- Wide selection of standard packing materials
- Versatile mounting options
- Large, stainless steel ball checks for smooth fluid delivery of high-viscosity coating material
- Large, enclosed solvent chamber for increased upper packing life
- Mechanical air valve for fast cycling action
- Sheet metal cover for protection from the industrial environment
- Aluminum and stainless steel models available

© 2013 Nordson Corporation
All rights reserved

64B Pump

Specifications

Properties	Fluid-to-Air Pressure Ratio	
	15:1	**30:1**
Maximum Fluid Working Pressure, bar (psi)	103 (1500)	207 (3000)
Air Requirements(1), l/second (cfm)	2.8 (5.8)	2.8 (5.8)
Fluid Delivery(2), l/min (gpm)		
@ 15 cycles/min	1.89 (0.50)	0.95 (0.25)
@ 30 cycles/min	3.79 (1.02)	1.93 (0.51)
@ 60 cycles/min	7.57 (2.04)	3.86 (1.02)
l (gal) per cycle	0.126 (0.033)	0.063 (0.017)
Pump Cycles, cycles/l (cycles/gal)	8 (31)	15 (59)
Connections		
Air Inlet	$^3/_8$-in. NPT	$^3/_8$-in. NPT
Fluid Outlet	$^3/_8$-in. NPT	$^3/_8$-in. NPT
High Pressure Airless Hose Size ID, mm (in.)	4.8 ($^3/_{16}$) 6.4 ($^1/_4$) 9.5 ($^3/_8$)	4.8 ($^3/_{16}$) 6.4 ($^1/_4$) 9.5 ($^3/_8$)
Minimum Air Line Size ID, mm (in.)	9.5 ($^3/_8$)	9.5 ($^3/_8$)

(1) Air requirements at 15 cycles, 4.14 bar (60 psig).

(2) One cycle = two strokes.

© 2013 Nordson Corporation
All rights reserved

Ordering Information

NOTE: Model 64B pumps do not include siphon accessories or air motor accessories. All 64B pumps are shipped with miscellaneous fittings, elbows, and connectors. These pumps are also shipped with Type-U packings unless otherwise indicated. To order other accessories for your pump, refer to *Pump Accessories* in this section.

Part	Description	Note
	Standard Pumps	
244766	15:1 aluminum pump, wall-mount	
247027	15:1 stainless steel pump, wall-mount	
244773	30:1 aluminum pump, wall-mount	
247028	30:1 stainless steel pump, wall-mount	
	Circulation Valve Kits	
244777	Standard, single	
244778	Stainless steel, single	
244779	Standard, dual	
244780	Stainless steel, dual	
	Siphon Accessory Group	
498552	Siphon accessory group standard 15:1 and 30:1	
498555	Siphon accessory group stainless steel 15:1 and 30:1	
	Air Motor Accessory Group	
1024722	Air motor accessory group, $^{3}/_{8}$ in.	A
	Dolly Frame	
245859	Small pump dolly	B

NOTE A: Includes FRL (filter, regulator, lubricator) and all necessary hoses, fittings, oil, brackets, etc.

B: A wall-mounting kit is not included with the dolly but is included with the pump.

© 2013 Nordson Corporation
All rights reserved

64B Pump

Standard Packing Glands

64B Ratio & Part	Packing	Packing Gland Type(2) with O-Rings				
		A	D	F	G	U
Aluminum	Upper	503575	503568	245883	240864	333383
15:1	Lower	503580	503583	245884		335367
244766	Kit	106119		106289	106395(1)	335388
Stainless Steel	Upper		248077	246992	248058	335369
15:1	Lower		248076	246993	248059	335368
247027	Kit				106397(1)	337712
Aluminum	Upper	503535	503538	245881		335365
30:1	Lower	503540	503543	245882		335370
244773	Kit	106123		106294	106398(1)	337713
Stainless Steel	Upper		248075	247015	248060	335366
30:1	Lower		248074	247014	248061	335371
247028	Kit				106398(1)	337714

(1) Spacer, U-cup, and O-ring kit. Kit does not include metal gland housings and retaining rings. Each kit contains spacer, U-cup, and O-rings for both upper and lower packing glands. When using the Type-G packing gland, you must reuse the housings from the previous packing gland.

(2) Refer to *Packing Gland Types* in this section for definition of materials.

© 2013 Nordson Corporation
All rights reserved

PermaFlo Series Pumps

Description

The Nordson PermaFlo series pumps are air-powered, demand-type, dual-acting, reciprocating pumps designed for use in dead-end or circulating systems. The PermaFlo 815 pump is available in 15:1 fluid-to-air ratio and the PermaFlo 830 is available in 30:1 fluid-to-air ratio. Both are constructed of stainless steel and are designed for use with abrasive, high-solid, waterborne, protective and maintenance, and heavy primer coatings. These coatings include organic and inorganic zincs, heavy primers, vinyls, sealers, undercoatings, acrylic emulsions, adhesives, corrosive materials and materials containing halogenated hydrocarbon solvents. The pumps can be mounted vertically on a wall, stand, or dolly, and include an integral wall-mounting bracket.

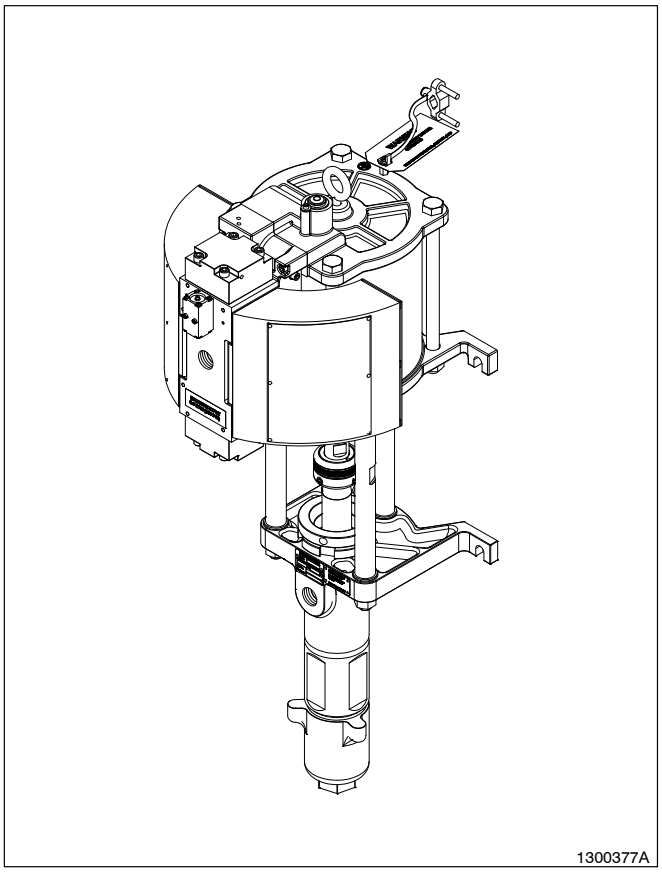

Features

- Patented ScoreGuard® wear-resistant coating for superior durability and performance
- Quick-disconnect design of air motor and hydraulic section to minimize maintenance
- Adjustable upper packings to minimize downtime and ensure longer life
- Produces less pressure pulsation (pump wink) to provide uniform film build
- External side-mounted air valve for easy access and long life
- All stainless steel wetted parts construction to accommodate a wide range of coating applications
- Muffler design meets OSHA requirements for safe operation without hearing protection
- Self-lubricating elastomers that satisfy newer EPA requirements
- Integral wall-mounting bracket to facilitate easy installation and direct retrofit with 180D/360D pumps

© 2013 Nordson Corporation
All rights reserved

PermaFlo Series Pumps

Specifications

Properties	Fluid-to-Air Pressure Ratio	
	15:1 (815)	**30:1 (830)**
Maximum Fluid Working Pressure, bar (psi)	103 (1500)	206 (3000)
Maximum Air Pressure, bar (psi)	7 (100)	7 (100)
Air Requirements(1), liters/second (scfm)	2.8 (18)	2.8 (18)
Pump Cycles(2), cycles/liters (cycles/gal)	2 (7.4)	4 (15.4)
Fluid Delivery(2),		
lliters/min (gpm)		
@ 15 cycles/min	7.7 (2.04)	3.7 (0.98)
@ 30 cycles/min	15.4 (4.08)	7.4 (1.96)
@ 60 cycles/min	30.8 (8.16)	14.8 (3.92)
liters (gal) per cycle	0.51 (0.136)	0.24 (0.065)
Connections		
High Pressure Port Threads	$^3/_4$-in. NPTF	$^3/_4$-in. NPTF
Siphon Hose Port Threads	1-in. NPTF	1-in. NPTF
Minimum Air Line ID, mm (in.)	19 ($^3/_4$)	19 ($^3/_4$)
High Pressure Hose ID, mm (in.)	6 or 10 ($^1/_4$ or $^3/_8$)	6 or 10 ($^1/_4$ or $^3/_8$)
Siphon Hose ID, mm (in.) (minimum)	25 (1)	25 (1)
Air Motor, mm (in.)		
Diameter	203 (8)	203 (8)
Stroke	119 (4.7)	119 (4.7)

(1) Air requirements at 15 cycles, 3.45 bar (50 psig).

(2) One cycle = two strokes.

© 2013 Nordson Corporation
All rights reserved

Ordering Information

NOTE: All pumps are shipped with Type-U packings, suitable for most coatings. Kit replaces upper and lower packings. The PermaFlo series pumps do not include air motor or siphon accessories.

815 and 830 Series Pumps

Part	Description	Note
	Standard Pumps	
1024648	Pump, 815, Type U packings	
1065204	Pump, 815, Type F packings	
1023362	Pump, 830, Type U packings	
1065202	Pump, 830, Type F packings	
	Self Adjusting Pumps	
1085453	Pump, 815, Type D packings	
1085452	Pump, 830, Type D packings	
1602026	Pump, 815, Type F, self-adjusting packings	
1602027	Pump, 830, Type F, self-adjusting packings	
	Air Motor Accessory Group	
1029320	Air motor accessory group, stainless steel	A
	Siphon Accessory Group	
170120	Siphon accessory group, stainless steel	
NOTE A: An air lubricator is not required. All elastomers in the air motor are self-lubricating.		

815 Pump Packing Gland Kits

Part	Description	Note
1029669	Kit, packing, Type U, (standard packings)	
1060457	Kit, packing, Type F, (standard packings)	
1037841	Kit, packing, Type L, (standard packings)	
1085457	Kit, packing, Type D, (self adjusting)	
1089172	Kit, packing, Type F (self adjusting)	

© 2013 Nordson Corporation
All rights reserved

PermaFlo Series Pumps

830 Pump Packing Gland Kits

Part	Description	Note
1027528	Kit, packing, Type U, (standard packings)	
1060458	Kit, packing, Type F, (standard packings)	
1042203	Kit, packing, Type L, (standard packings)	
1085456	Kit, packing, Type D, (self adjusting)	
1089171	Kit, packing, Type F (self adjusting)	

Air Motor Service Kits

Part	Description	Note
1024892	Coupler kit	
1029057	Air valve T-seal kit	
1029058	Air valve spool and seals kit	
1030558	Pilot valve kit	

Hydraulic Section Kits

815 Pump	830 Pump	Description	Note
1029666	1027525	Pressure ball check kit	
1029667	1027526	Siphon ball check kit	
1029668	1027527	Hydraulic seal kit	
1029669	1027528	Type U packing kit	A
1037841	1042203	Type L packing kit	B

NOTE A: Type U packings (Ultra-High Molecular Weight PolyEthylene (UHMWPE)) are the standard packings shipped with the PermaFlo series pumps. Kit replaces upper and lower packings.

B: Type L packings are only available for PermaFlo pumps, and are good for varnishes and other thin, non-pigmented materials.

© 2013 Nordson Corporation
All rights reserved

StediFlo Low to Medium Pressure Pumps

Description

StediFlo pumps set new standards for efficiency and performance in liquid applications. They provide versatility and high performance to meet a wide range of pressure and volume requirements. Designed for durability and ease of service, StediFlo pumps are ideally suited for a variety of finishing applications.

With fewer parts and adjustable packings, StediFlo pumps are easy to maintain and require minimal repair. StediFlo pumps also allow for easy adjustment of pressure ratio and output if the usage conditions change, requiring the operator to only change the air motor.

StediFlo pumps are available in 3:1, 6:1, 8:1 and 12:1 pressure ratios and are available with a variety of packing glands. All units are stainless steel making them ideal for use with water–based coatings.



StediFlo Pumps

Features and Benefits

- **Adjustable packings reduce wear** – lower maintenance costs.
- **Fewer components** – for easy assembly and disassembly.
- **Closed lubrication chamber separates the air motor and the material pump** – prevents contamination.
- **Large pump openings and fluid passages** – reduce pressure loss and provide better flushing.
- **Large built-in muffler** – reduces the noise levels for an environmentally friendly design.
- **Built-in run-away valve** – decreases wear and tear on the pump.

© 2013 Nordson Corporation
All rights reserved

StediFlo Low to Medium Pressure Pumps

Specifications

Model	3:1	6:1	8:1	12:1
Part Number	1601703	1601704	1601705	1601706
Pressure ratio	3:1	6:1	8:1	12:1
Output/cycle	0.16 gal (600 cm^3)	0.16 gal (600 cm^3)	0.04 gal (150 cm^3)	0.16 gal (600 cm^3)
Fluid flow at 15 cpm	2.4 gal/min (9.1 l/min)	2.4 gal/min (9.1 l/min)	0.6 gal/min (2.3 l/min)	2.4 gal/min (9.1 l/min)
Fluid flow at 30 cpm	4.8 gal/min (18.2 l/min)	4.8 gal/min (18.2 l/min)	1.2 gal/min (4.6 l/min)	4.8 gal/min (18.2 l/min)
Max. air inlet pressure	116 psi (8 bar)	116 psi (8 bar)	116 psi (8 bar)	101.5 psi (7 bar)
Max. Permissible operating pressure	348 psi (24 bar)	696 psi (48 bar)	928 psi (64 bar)	1218 psi (84 bar)

© 2013 Nordson Corporation
All rights reserved

Ordering Information

Part	Description	Note
	Air Motors	A
1601530	Seal Kit, 3:1 pump	
1601543	Repair Kit, 3:1 pump	
1601537	Seal Kit, 6:1 pump	
1601542	Repair Kit, 6:1 pump	
1601530	Seal Kit, 8:1 pump	
1601541	Repair Kit, 8:1 pump	
1601503	Seal Kit, 12:1 pump	
1601504	Repair Kit, 12:1 pump	
	Hydraulic Section	A
1601635	Seal Kit, 3:1 pump	
1601636	Repair Kit, 3:1 pump	
1601635	Seal Kit, 6:1 pump	
1601636	Repair Kit, 6:1 pump	
1601631	Seal Kit, 8:1 pump	
1601632	Repair Kit, 8:1 pump	
1601635	Seal Kit, 12:1 pump	
1601636	Repair Kit, 12:1 pump	
1601639	**Mounting Bracket**	

NOTE A: Repair kit includes the seal kit.

© 2013 Nordson Corporation
All rights reserved

This page intentionally left blank.

© 2013 Nordson Corporation
All rights reserved

StediFlo Medium to High Pressure Pumps

Description

StediFlo pumps set new standards for efficiency and performance in liquid applications. They provide versatility and high performance to meet a wide range of pressure and volume requirements. Designed for durability and ease of service, StediFlo pumps are ideally suited for a variety of finishing applications.

With fewer parts and self-adjusting packings, StediFlo pumps are easy to maintain and require minimal repair. StediFlo pumps also allow for easy adjustment of pressure ratio and output if the usage conditions change, requiring the operator to only change the air motor.

StediFlo pumps are available in 10:1, 18:1, 32:1 and 57:1 pressure ratios and are available with a variety of packing glands. All units are stainless steel making them ideal for use with water−based coatings. In addition, they can be used for airless or air-assisted airless applications and with hot or cold materials.



StediFlo Pumps

Features and Benefits

- **Self-adjusting packings reduce wear –** lower maintenance costs.
- **Fewer components –** for easy assembly and disassembly.
- **Closed lubrication chamber separates the air motor and the material pump –** prevents contamination.
- **Large pump openings and fluid passages –** reduce pressure loss and provide better flushing.
- **Large built-in muffler –** reduces the noise levels for an environmentally friendly design.
- **Built-in run-away valve –** decreases wear and tear on the pump.

© 2013 Nordson Corporation
All rights reserved

StediFlo Medium to High Pressure Pumps

Specifications

Model	10:1	18:1	32:1	57:1
Part Number	1601681	1601688	1601689	1601692
Pressure ratio	10:1	18:1	32:1	57:1
Output/cycle	0.007 gal (27 cm^3)	0.02 gal (72 cm^3)	0.02 gal (72 cm^3)	0.1 gal (360 cm^3)
Fluid flow at 15 cpm	0.1 gal/min (0.4 l/min)	0.29 gal/min (1.1 l/min)	0.29 gal/min (1.1 l/min)	1.43 gal/min (5.4 l/min)
Fluid flow at 30 cpm	0.2 gal/min (0.8 l/min)	0.58 gal/min (2.2 l/min)	0.58 gal/min (2.2 l/min)	2.86 gal/min (10.8 l/min)
Max. air inlet pressure	116 psi (8 bar)	116 psi (8 bar)	116 psi (8 bar)	101.5 psi (7 bar)
Max. Permissible operating pressure	1160 psi (80 bar)	2088 psi (144 bar)	3712 psi (256 bar)	5786 psi (399 bar)
Piston diamter, air motor	2.0 in (50 mm)	4.1 in (105 mm)	5.5 in (140 mm)	13.1 in (333 mm)
Piston stroke, air motor	3.0 in (75 mm)	3.0 in (75 mm)	3.0 in (75 mm)	4.7 in (120 mm)

© 2013 Nordson Corporation
All rights reserved

Ordering Information

Part	Description	Note
	Air Motors	A
1601522	Seal Kit, 10:1 pump	
1601558	Repair Kit, 10:1 pump	
1601530	Seal Kit, 18:1 pump	
1601535	Repair Kit, 18:1 pump	
1601537	Seal Kit, 32:1 pump	
1601536	Repair Kit, 32:1 pump	
1601517	Seal Kit, 57:1 pump	
1601518	Repair Kit, 57:1 pump	
	Hydraulic Section	A
1601701	Seal Kit, 10:1 pump	
1601702	Repair Kit, 10:1 pump	
1601717	Seal Kit, 18:1 pump	
1601720	Repair Kit, 18:1 pump	
1601717	Seal Kit, 32:1 pump	
1601720	Repair Kit, 32:1 pump	
1601673	Seal Kit, 57:1 pump	
1601574	Repair Kit, 57:1 pump	
	Mounting Bracket	
1601709	Mounting bracket, 10:1 pump	
1601602	Mounting bracket, 18:1 pump	
1601602	Mounting bracket, 32:1 pump	
1601683	Mounting bracket, 57:1 pump	
NOTE A: Repair kit includes the seal kit.		

© 2013 Nordson Corporation
All rights reserved

This page intentionally left blank.

© 2013 Nordson Corporation
All rights reserved

Pump Accessories

Description

The following accessories can be used with Nordson Liquid pumps.

Ordering Information

Part	Description	Screen Size, in.	Note
	Siphon Strainers for 180D/360D Pumps and 32/64 Pumps		
249355	Stainless steel siphon for 1-in. pipe siphon rod	No screen	
170120	Stainless steel strainer for 1 in. pipe siphon rod	No screen	C
	Siphon Strainers for 25B 2:1 and 4:1 pumps		
163040	Electroless, nickel-plated siphon strainer, 0.062 holes	No screen	A, B
163050	Electroless, nickel-plated siphon strainer	0.009	A
163052	Electroless, nickel-plated siphon strainer	0.015	A
	Siphon Strainers for 25B 16:1 and 27:1 pumps; 64B pumps		
163020	Electroless, nickel-plated siphon strainer, 0.062 holes	No screen	A, B
163030	Electroless, nickel-plated siphon strainer	0.006	A
163031	Electroless, nickel-plated siphon strainer	0.009	A
163032	Electroless, nickel-plated siphon strainer	0.012	A
163038	Electroless, nickel-plated siphon strainer	0.030	A
247234	Stainless steel siphon strainer, 0.062 holes	No screen	A, B
	Pail		
248159	5-gallon pail		

NOTE A: The siphon rod is part of the pump.
B: These siphon strainers do not use O-rings.
C: Siphon strainer assemblies include: strainer, siphon rod, siphon hose, and pump chamber fluid.

© 2013 Nordson Corporation
All rights reserved

This page intentionally left blank.

© 2013 Nordson Corporation
All rights reserved

180D/360D Pumps

Description

The Nordson model 180D/360D pumps have been obsoleted and replaced by PermaFlo pumps. These pages are for reference only.

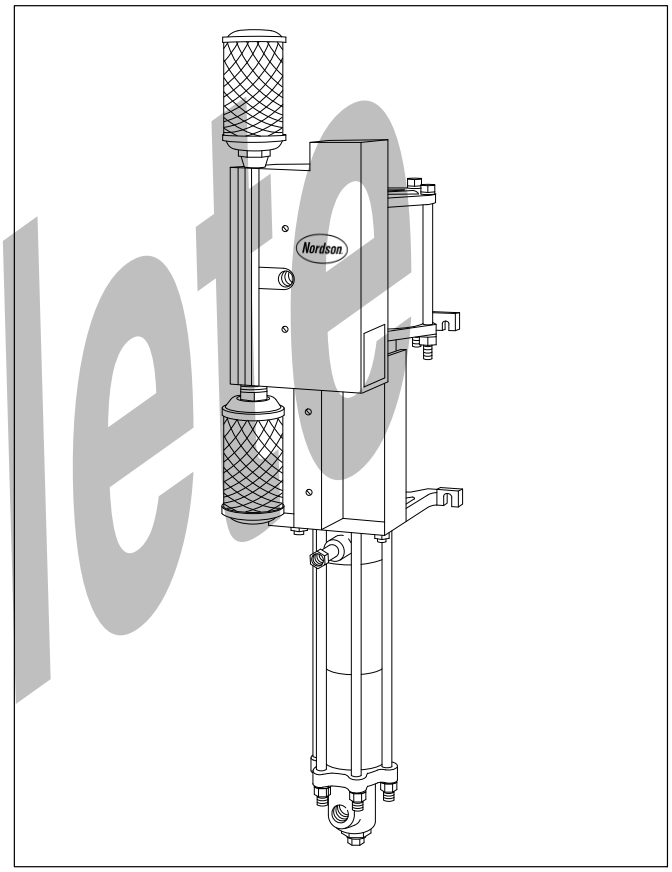

Obsolete

© 2013 Nordson Corporation
All rights reserved

180D/360D Pumps

Specifications

Properties	Fluid-to-Air Pressure Ratio(1)					
	180D Pump			360D Pump		
	4:1	12:1	16:1	8:1	24:1	32:1
Maximum Air Pressure, bar (psig)	7.94 (1.15)	7.94 (1.15)	7.94 (1.15)	7.94 (1.15)	7.94 (1.15)	7.94 (1.15)
Pump Cycles(2), cycles/l (cycles/gal)	0.80 (3)	1.85 (7)	2.64 (10)	0.80 (3)	1.85 (7)	2.64 (10)
Fluid Delivery(2), l/min (gpm)						
@ 15 cycles/min	19.53 (5.16)	7.68 (2.03)	5.79 (1.53)	19.53 (5.16)	7.68 (2.03)	5.79 (1.53)
@ 30 cycles/min	39.06 (10.32)	15.31 (4.05)	11.58 (3.06)	39.06 (10.32)	15.31 (4.05)	11.58 (3.06)
@ 60 cycles/min	78.12 (20.64)	30.62 (8.10)	23.16 (6.12)	78.12 (20.64)	30.62 (8.10)	23.16 (6.12)
l (gal) per cycle	1.303 (0.344)	0.510 (0.135)	0.385 (0.102)	1.303 (0.344)	0.510 (0.135)	0.385 (0.102)
Connections						
Air Inlet, 180D	3/4-in. NPT	3/4-in. NPT	3/4-in. NPT	3/4-in. NPT	3/4-in. NPT	3/4-in. NPT
Air Inlet, 360D	1-in. NPT	1-in. NPT	1-in. NPT	1-in. NPT	1-in. NPT	1-in. NPT
Fluid Outlet	1/2-in. NPT	1/2-in. NPT	1/2-in. NPT	1/2-in. NPT	1/2-in. NPT	1/2-in. NPT
Minimum Air Line ID, mm (in.)	19.0 (3/4)	19.0 (3/4)	19.0 (3/4)	25.4 (1)	25.4 (1)	25.4 (1)
High-Pressure Hose ID, mm (in.)	6.4 or 9.5 (1/4 or 3/8)	6.4 or 9.5 (1/4 or 3/8)	6.4 or 9.5 (1/4 or 3/8)	6.4 or 9.5 (1/4 or 3/8)	6.4 or 9.5 (1/4 or 3/8)	6.4 or 9.5 (1/4 or 3/8)
Length, mm (in.)	1168 (46)	1270 (50)	1270 (50)	1168 (46)	1270 (50)	1270 (50)
Air Motor, mm (in.)						
diameter	177 (7)	177 (7)	177 (7)	254 (10)	254 (10)	254 (10)
length	127 (5)	127 (5)	127 (5)	127 (5)	127 (5)	127 (5)

(1) Choose the proper fluid-to-air ratio to achieve the required fluid pressure at the lowest pump cycling rate within a realistic air pressure range of 1.38–5.52 bar (20–80 psig). Mid-range ratios (16:1) are desirable where fluid pressures of 34.48–82.76 bar (500–1200 psig) are required.

(2) One cycle = two strokes.

© 2013 Nordson Corporation
All rights reserved

Ordering Information

NOTE: Model 180D/360D pumps are obsolete and can no longer be ordered. The following kits, accessory groups, dolly, and miscellaneous parts are still available. To order other accessories for your pump, refer to *Pump Accessories* in this section.

Part	Description	Note
	Standard Pumps	
	Obsolete, no longer available. Replaced by PermaFlo pumps. Refer to *PermaFlo Pumps* in this section.	
	Mounting Kits	
114026	Pump floor stand (OBSOLETE)	
	Circulation Valve Kits	
244777 244779 244780 336841	Standard, single Standard, dual Stainless steel, dual Stainless steel, single (OBSOLETE)	
	Siphon Accessory Group	
170120	Siphon accessory group	
	Air Motor Accessory Group	
170121	Air motor accessory group (OBSOLETE)	A
	Dolly	
114027	Pump dolly, large (OBSOLETE)	B
	Miscellaneous	
334870	180D and 360D solvent chamber cup kit (OBSOLETE)	

NOTE A: Includes FRL (filter, regulator, lubricator) and all necessary hoses, fittings, oil, brackets, etc.
B: A wall-mounting kit is not included with the dolly but is included with the pump.

© 2013 Nordson Corporation
All rights reserved

180D/360D Pumps

Standard Packing Glands

180D Ratio & Part	360D Ratio & Part	Packing	Packing Gland Type(1) with O-Rings			
			D	F	G	U
Stainless Steel	Stainless Steel	Upper				337725 OBSOLETE
4:1	8:1	Lower				
249420 OBSOLETE	249419 OBSOLETE	Kit	106387 OBSOLETE	106384 OBSOLETE	106388 OBSOLETE	337724 OBSOLETE
Stainless Steel	Stainless Steel	Upper	249293 OBSOLETE	249344 OBSOLETE	249347 OBSOLETE	322484
12:1	24:1	Lower	249295 OBSOLETE	249346 OBSOLETE	249348 OBSOLETE	322488
249359 OBSOLETE	249153 OBSOLETE	Kit	106425	106426	106427 OBSOLETE	337715
Plated Steel	Plated Steel	Upper	249293 OBSOLETE	249344 OBSOLETE	249347 OBSOLETE	322484
12:1	24:1	Lower	249295 OBSOLETE	249346 OBSOLETE	249348 OBSOLETE	322488
249154 OBSOLETE	249367 OBSOLETE	Kit	106425	106426	106427 OBSOLETE	337715
Plated Steel	Plated Steel	Upper	249378 OBSOLETE	249372 OBSOLETE	249408 OBSOLETE	322496 OBSOLETE
16:1	32:1	Lower	249379	249371 OBSOLETE	249409 OBSOLETE	322492
249111 OBSOLETE	249112 OBSOLETE	Kit	106434	106435	106436 OBSOLETE	337716

(1) Refer to *Packing Gland Types* in this section for definition of materials.

© 2013 Nordson Corporation
All rights reserved

Section 5
Plural Component Systems

General Information **5-1**
Description 5-1
Contact Information 5-1
Order Form (included in General Information section)

Optimix I **5-3**
Description 5-3
Features and Benefits 5-3
Areas of Application 5-3
Specifications 5-4

Optimix II **5-5**
Description 5-5
Features and Benefits 5-5
Areas of Application 5-5
Specifications 5-6

Optimix III **5-7**
Description 5-7
Features and Benefits 5-7
Areas of Application 5-7
Specifications 5-8

Optimix IV **5-9**
Description 5-9
Features and Benefits 5-9
Areas of Application 5-9
Specifications 5-10

© 2013 Nordson Corporation
All rights reserved

Table of Contents

© 2013 Nordson Corporation
All rights reserved

General Information

Description

Optimix™ Plural Component Metering Systems provide mixing and proportioning capability for various materials, and offer flexibility for many different applications and industries.

Contact Information

The Optimix systems are available in different versions. For technical support or assistance ordering, talk to your Nordson representative or refer to the contacts below:

Technical Support:
Email: ics.tech.support@nordson.com
Phone: (800) 433–9319

United States Customer Service and Orders:
Email: finishingorders@nordson.com
Phone: (800) 433–9319

Europe Customer Service and Orders:
Email: Liquid.systems@nordson.com
Phone: 00800 7001 7001

© 2013 Nordson Corporation
All rights reserved

© 2013 Nordson Corporation
All rights reserved

Optimix I

Description

The OptiMix I plural component system is an electronic mixing and proportioning unit for the processing of solvent and water–based paints. Through its precision and flexibility, the OptiMix I unit attains high efficiency and provides excellent surface quality. As a result, the OptiMix I unit is an ideal solution for a variety of general industry and trade applications.

The unit allows the rapid change of up to 16 different paints and lacquers. It can be used for low, as well as high pressure spraying. The OptiMix I system processes paints of various viscosities at outputs from a few ounces up to several gallons per minute.

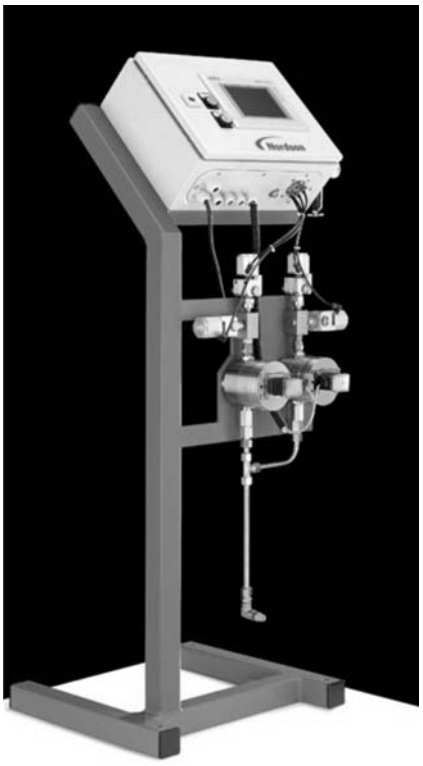

Optimix I

Features and Benefits

- **Allows the rapid change of up to 16 different paints and lacquers.**
- **Processes both solvent and water-based paints.**
- **Accommodates paints of various viscosities at outputs from a few ounces up to several gallons per minute.**
- **Provides excellent surface quality.**

Areas of Application

- **Furniture industry**
- **Painting contractors**
- **Machine and vehicle manufactures**
- **Automatic and manual lacquering and coating lines**

© 2013 Nordson Corporation
All rights reserved

Optimix I

Specifications

Volumetric mixing ratio	0.5: 1 to 50:1
Proportioning tolerance	Max. 3%
Max. allowable spray pressure	3625 psi (250 bar)
Controllable valves	Up to 16
Input voltage	115/230 V
Max. air inlet pressure	116 psi (8 bar)
Dimensions (L x W x H)	20 in x 20 in x 55 in (500 mm x 500 mm x 1400 mm)
Weight (depending on version)	110 lbs (50 kg)

© 2013 Nordson Corporation
All rights reserved

Optimix II

Description

The OptiMix II system is a robust, high−performance, multi-purpose plural component painting and coating unit with a freely adjustable mixing ratio. It incorporates an innovative electronic control system that provides high proportioning accuracy, making the OptiMix II system ideal for most any application in general industry or trade.

The unit allows the rapid change of up to 16 different paints and lacquers. It can be used for low as well as high pressure spraying. The OptiMix II system processes paints of various viscosities at outputs from a few ounces up to several gallons per minute. If needed, the system can also be used as a single−component spray unit for added versatility.

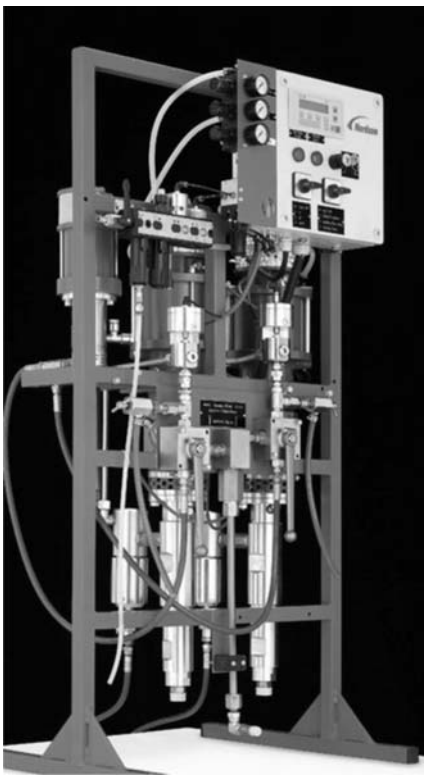

Optimix II

Features and Benefits

- **Electronic controls provide high proportioning accuracy.**
- **Allows the rapid change of up to 4 different paints and lacquers.**
- **Ideal for low- and high-pressure spraying.**
- **Accommodates paints of various viscosities at outputs from a few ounces up to several gallons per minute.**

Areas of Application

- **Automatic and manual painting lines**
- **Furniture industry**
- **Industrial coatings**
- **Machine and vehicle manufacture**
- **Steel construction and structures**

© 2013 Nordson Corporation
All rights reserved

Optimix II

Specifications

Volumetric mixing ratio	0.5: 1 to 50:1
Pressure ratio	10:1 to 52:1
Proportioning tolerance	Max. 3%
Max. spray pressure	Up to 6032 psi (416 bar)
Output per cycle (depending on pump combination)	Up to 72 cm^3 2.4 fl oz
Controllable valves	4 (6)
Output at 40 cycles (depending on pump combination)	1:1 to 1.5 gal/min (5.7 l/min) 4:1 to 1.0 gal/min (3.6 l/min) 10:1 to 0.8 gal/min (3.1 l/min)
Input voltage	115/230 V
Max. air inlet pressure	116 psi (8 bar)
Dimensions (L x W x H)	28 in x 35 in x 55 in (700 mm x 900 mm x 1400 mm)
Weight (depending on version)	265 lbs (120 kg)

© 2013 Nordson Corporation
All rights reserved

Optimix III

Description

The OptiMix III plural component metering system is ideal for large surface area applications and high−build coatings. The robust, high−performance, unit provides a maximum spray pressure of up to 6670 psi (460 bar) or a maximum output of over 6.4 gallons (24 liters) per minute. It is ideal for the proportioning and application of low to high viscosity plural−component materials, even those with a short pot life. For coating materials with extremely high viscosities, the OptiMix III unit can be optimally fitted with fluid heaters or other heating equipment.

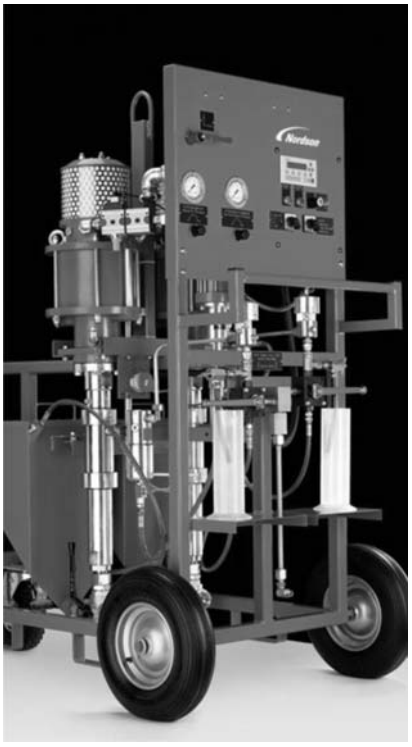

Optimix III

Features and Benefits

- **Robust unit ideal for large surface area applications and high-build coatings.**
- **Proportioning and application of low to high viscosity plural-component materials, even those with a short pot life**

Areas of Application

- **Marine and offshore industry**
- **Pipe and tank coating**
- **Noise reduction and fire protection**
- **Structures and corrosion protection**
- **Steel construction and structures**
- **Railway vehicles**
- **Industrial coatings**
- **Insulating coatings**
- **Automatic painting lines**

© 2013 Nordson Corporation
All rights reserved

Optimix III

Specifications

Volumetric mixing ratio	0.5: 1 to 17:1
Pressure ratio	32:1 to 71:1
Proportioning tolerance	Max. 3%
Max. spray pressure	Up to 6670 psi (460 bar)
Output per cycle (depending on pump combination)	Up to 306 cm^3 10.3 fl oz
Controllable valves	4 (6)
Output at 40 cycles (depending on pump combination)	1:1 to 6.4 gal/min (24.4 l/min) 4:1 to 4.0 gal/min (15.3 l/min) 10:1 to 3.5 gal/min (13.4 l/min)
Input voltage	115/230 V
Max. air inlet pressure	116 psi (8 bar)
Dimensions (L x W x H)	59 in x 36 in x 67 in (1500 mm x 920 mm x 1700 mm)
Weight (depending on version)	353 lbs (160 kg)

© 2013 Nordson Corporation
All rights reserved

Optimix IV

Description

The OptiMix IV metering system is designed to meet the highest performance demands. It can handle the need for enormous surface coverage and high coating thickness – all while offering the capability for simultaneous operation with several spray guns or extremely long hoses. With its high output capability, the OptiMix IV unit can process the most difficult materials. It is also ideal for both manual and automatic coating.



Optimix IV

Features and Benefits

- **Robust unit ideal for extremely large surface area applications and high-build coatings.**
- **Can be used with multiple spray guns and long hoses.**
- **High output capability allows for spraying difficult materials.**

Areas of Application

- **Marine and offshore industry**
- **Pipe and tank coating**
- **Industrial coatings**
- **Insulating coatings**
- **Noise reduction and fire protection**
- **Heavy corrosion protection**
- **Automatic painting lines and other areas with high demands under severe conditions**

© 2013 Nordson Corporation
All rights reserved

Optimix IV

Specifications

Volumetric mixing ratio	0.5: 1 to 17:1
Pressure ratio	28:1 to 75:1
Proportioning tolerance	Max. 3%
Max. spray pressure	Up to 6525 psi (450 bar)
Output per cycle (depending on pump combination)	Up to 550 cm^3 18.6 fl oz
Controllable valves	4 (6)
Output at 40 cycles (depending on pump combination)	1:1 to 11.6 gal/min (44 l/min) 4:1 to 7.4 gal/min (27.5 l/min) 10:1 to 6.4 gal/min (24.2 l/min)
Input voltage	115/230 V
Max. air inlet pressure	116 psi (8 bar)
Dimensions (L x W x H)	45 in x 35 in x 67 in (1160 mm x 900 mm x 1700 mm)
Weight (depending on version)	397 lbs (180 kg)

© 2013 Nordson Corporation All rights reserved

Section 6
Dolly Systems

Trilogy Non-Electrostatic AAA Dolly System 6-1
Description 6-1
Features 6-1
Specifications 6-1
Ordering Information 6-2

Other Available Dolly Systems 6-3

© 2013 Nordson Corporation
All rights reserved

Table of Contents

© 2013 Nordson Corporation
All rights reserved

Trilogy Non-Electrostatic AAA Dolly System

Description

The Trilogy non−electrostatic dolly system is designed for use with the Trilogy air assist airless spray gun. Available in a variety of configurations, the system eliminates component assembly and provides ease of mobility. The versatile dolly system can accommodate either 115 or 230 volt heaters in stainless steel or aluminum.

Whichever dolly system configuration you choose, the Trilogy system is plug-and-play, requiring just air and electrical connections. You can begin spraying almost immediately.



Features

- **Available to order as one-part number dolly system.**
- **Dolly, heater, pump and gun are pre-assembled** – eliminates component assembly.
- **Available in a variety of configurations** – for added versatility.
- **Accomodates either 115 or 230 volt heaters.**
- **Plug-and-play** – for quick, easy installation.

Specifications

Pump	
Fluid flow at 15 cpm	0.1 gal/min (0.4 l/min)
Fluid flow at 30 cpm	0.2 gal/min (0.8 l/min)
Output/cycle	0.007 gal (27 cm^3)
Pressure ratio	10:1
Max. air inlet pressure	116 psi (8 bar)
Max. Permissible operating pressure	1160 psi (80 bar)
Piston diameter, air motor	2.0 in (50 mm)
Piston stroke, air motor	3.0 in (75 mm)

© 2013 Nordson Corporation
All rights reserved

Trilogy Non-Electrostatic AAA Dolly Systems

Ordering Information

Part	Description
1601809	Trilogy dolly 10:1 pump, 115V NH-4 heater, AAA gun
1601808	Trilogy dolly 10:1 pump, 115V SS NH-4 heater, AAA gun
1601807	Trilogy dolly 10:1 pump, 230V NH-4 heater, AAA gun
1601806	Trilogy dolly 10:1 pump, 230V SS NH-4 heater, AAA gun
1601805	Trilogy dolly 10:1 pump, 230V SS StediTherm heater, AAA gun
1601810	Trilogy dolly 10:1 pump, no heater, AAA gun

© 2013 Nordson Corporation
All rights reserved

Other Available Dolly Systems

Part	Description	Note
	Trilogy Electrostatic Manual Dolly System with Diaphragm Pump	
1102950	System, dolly, LP, diaphragm pump, manual, Trilogy	

Part	Description	Note
	Dolly Frame	
245859	Small pump dolly	
720220	Large pump dolly	

© 2013 Nordson Corporation
All rights reserved

© 2013 Nordson Corporation
All rights reserved

Section 7
Filters and Heaters

Single- and Dual-Filter Assemblies 7-1
Description 7-1
Single-Filter Assembly 7-1
Dual-Filter Assembly 7-1
Specifications 7-2
Ordering Information 7-2
Filters 7-2
Filter Screens 7-3

In-Line Filter Series 7-5
Description 7-5
Ordering Information 7-5

Nozzle Disk Filters 7-7
Description 7-7
Ordering Information 7-7

NH-4 Heaters 7-9
Description 7-9
Features 7-9
Benefits of Heating Coatings 7-10
General Operation of a Nordson Hot Airless System 7-10
Specifications 7-11
Ordering Information 7-12
Standard NH-4 Heaters 7-12
NH-4 Stainless Steel Heaters 7-13
NH-4 Heaters (Japan Only) 7-13
External Adjustment Thermostat 7-13
NH-4 Heaters, Replacement Kits, and Heater Cartridges 7-14

© 2013 Nordson Corporation
All rights reserved

Table of Contents

StediTherm Heaters 7-15
Description 7-15
Features 7-15
Specifications 7-15
Ordering Information 7-16

© 2013 Nordson Corporation
All rights reserved

Single- and Dual-Filter Assemblies

Description

Nordson high-pressure fluid filters help prevent nozzle plugging by filtering out contaminants in coating materials before they reach the spray gun.

Single-Filter Assembly

The Nordson single-filter assembly consists of a base assembly, housing, replaceable filter screen, and a drain-off valve. These stainless steel wall mounted filters are available in two versions: one with a plug valve drain and one with a ball valve drain.

Dual-Filter Assembly

The Nordson dual-filter assemblies are used in constant-demand applications where it is impractical to stop production for filter cleaning and screen changing. The dual-filter assembly consists of replaceable filter screens, wall-mount brackets, and a valve to permit isolation and cleaning of either filter when the system is pressurized and operating. These stainless steel wall-mounted filters are available in two versions: one with three-way ball valves and one with check valves.

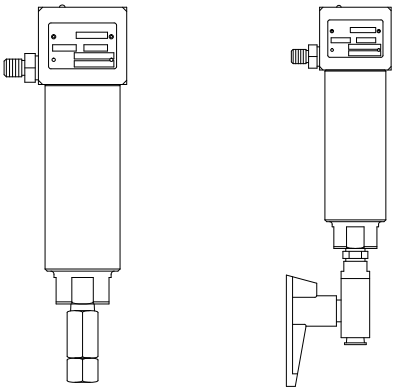

Plug Valve Drain Fluid Filter Ball Valve Drain Fluid Filter

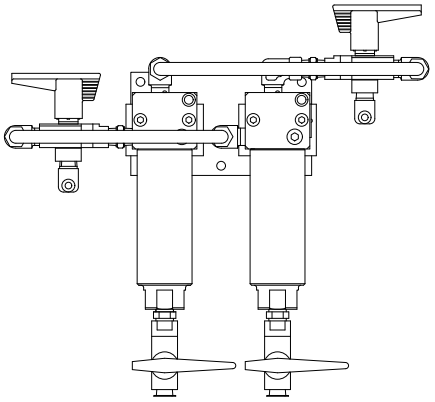

Dual Filters with Three-Way Ball Valves

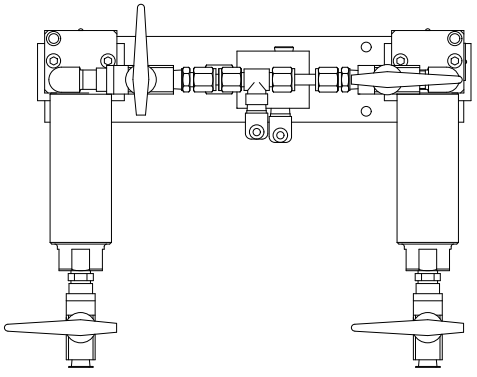

Dual Filters with Check Valves

© 2013 Nordson Corporation
All rights reserved

Single- and Dual-Filter Assemblies

Specifications

Properties	Single-Filter, Plug and Ball Valve Models	Dual-Filter, with Three-Way Ball Valves	Dual-Filter, with Check Valves
Maximum Operating Pressure, bar (psi)	207 (3000)	207 (3000)	207 (3000)
Input and Output Fittings	—	$^1/_2$-20 JIC	$^1/_2$-20 JIC
Overall Height, mm (in.)		424.2 (16.7)	355.6 (14)
Plug valve model	269.24 (10.6)	—	—
Ball valve model	335.28 (13.2)	—	—
Mounting Plate, mm (in.)			
Width	63.5 (2.5)	101.6 (4)	76.2 (3)
Length	63.5 (2.5)	177.8 (7)	368.3 (14.5)

Ordering Information

Filters

NOTE: All types of filters assemblies are airless, high-pressure.

Part	Description		
	Port	**Screen, in.**	**Filter Type and Mount**
			Single Stainless Steel Filter
338180	$^3/_8$-in. NPT	0.006	Wall mount, inverted, plug valve
338182	$^3/_8$-in. NPT	0.006	Wall mount, inverted, ball valve
			Dual Stainless Steel Filter
338431	$^3/_8$-in. NPT	0.006	Wall mount, inverted, three-way ball valve
338442	$^3/_8$-in. NPT	0.006	Wall mount, inverted, check valve
NOTE: Single high-pressure filters come with two filter screens, part 161106. Dual high-pressure filters come with four filter screens.			

© 2013 Nordson Corporation
All rights reserved

Single- and Dual-Filter Assemblies

Filter Screens

Part	Opening, Micron (in.)	Tyler Mesh	Description	Nozzle Flow Rate, in.
161122	53 (0.002)	270	Reinforced	0.03 and smaller
161102	53 (0.002)	270	Reinforced	0.03 and smaller
161103	74 (0.003)	200	Reinforced	0.04
161104	105 (0.004)	150	Reinforced	0.04
161106	177 (0.006)	80	Reinforced	0.06
161109	250 (0.009)	60	Reinforced	0.09
161112	297 (0.012)	48	Reinforced	0.14
161115	420 (0.015)	35	Reinforced	0.20
161120	595 (0.020)	30	Reinforced	0.20
161020	595 (0.020)	32	Not reinforced	0.30, 0.45
161030	762 (0.030)	22	Not reinforced	0.68 and larger

© 2013 Nordson Corporation
All rights reserved

© 2013 Nordson Corporation
All rights reserved

In-Line Filter Series

Description

Use the Nordson in-line filter assembly with low-pressure, air-atomizing spray devices. The filter is a wire mesh screen type. Different sizes of replacement mesh screens are available.

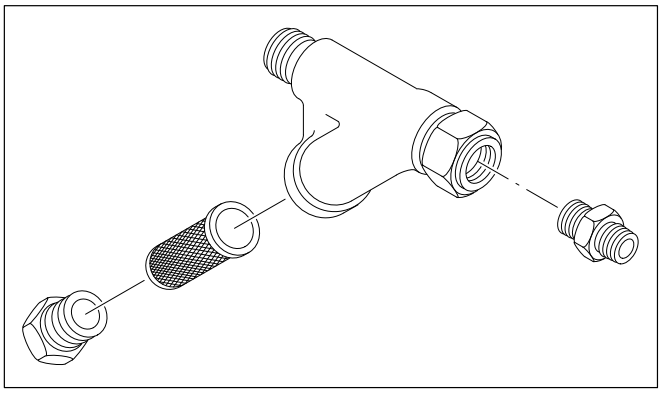

Ordering Information

NOTE: Do not use the in-line filter assembly for airless applications.

Part	Description	Screen Size, in.
	In-Line Filters	
240449	$^3/_8$-in. NPS x $^1/_4$-in. NPT hose connector	0.012
247031	$^3/_8$-in. NPS x $^3/_8$-in. NPT hose connector	0.006
	Optional Replacement Screens	
240446	Filter, fluid	0.012
240447	Filter	0.006

© 2013 Nordson Corporation
All rights reserved

© 2013 Nordson Corporation
All rights reserved

Nozzle Disk Filters

Description

The Nordson nozzle disk filters for A4B and A7A spray guns are intended to be used as a secondary filter directly behind flange type nozzles in applications where particles are causing nozzle plugging. The nozzle disk filters are available in several mesh sizes and are packaged in containers of 10 pieces.

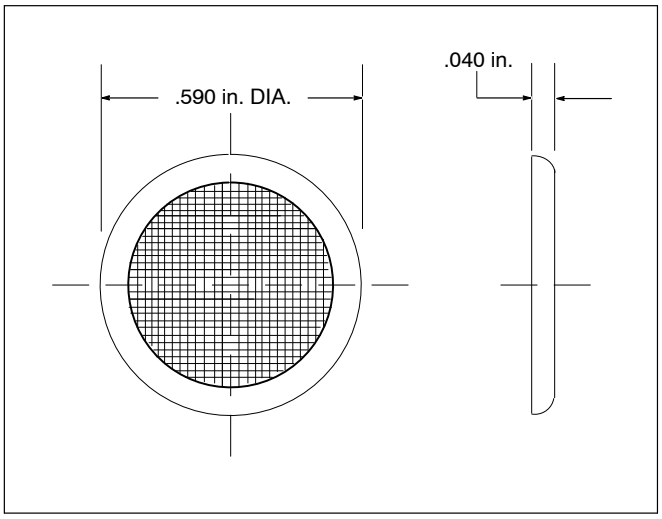

Ordering Information

Part	Screen Size
112193	.002 in.
165630	.006 in.
165632	.009 in.

© 2013 Nordson Corporation
All rights reserved

© 2013 Nordson Corporation
All rights reserved

NH-4 Heaters

Description

The Nordson model NH-4 is an electrically-operated, explosion-proof, in-line fluid heater. The fluid heater reduces the viscosity of coating materials and increases operating efficiency without adding solvents. The heater maintains the temperature of solventborne or waterborne coatings and wet glues, regardless of ambient temperature changes. The high-fluid velocity and low-watt density of the heat transfer surface provides uniform and efficient fluid heating. An adjustable thermostat temperature control and high-temperature limiter located in the fluid passage body provide accurate temperature control and safe operation.

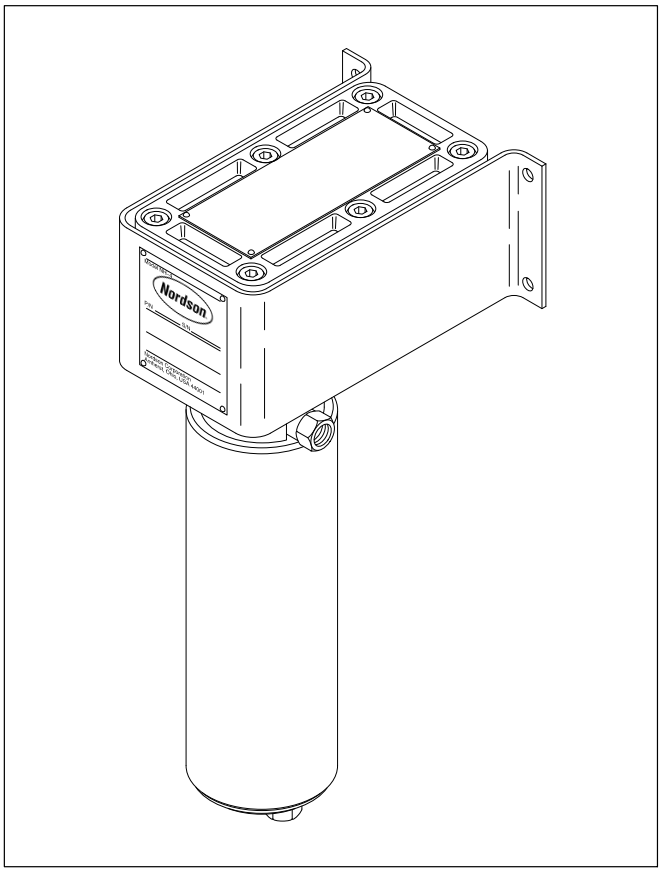

The NH-4 heater is available in standard, twin-passage, and stainless steel models. The twin-passage version is designed for high-flow applications, high-solid coatings, and other high-viscosity materials. The stainless steel version is available for use with corrosive or waterborne materials. The NH-4 heater can be installed in a series or parallel flow configuration to provide additional capacity.

The NH-4 heater can be wall or dolly mounted using the integral mounting bracket.

Features

- Simple design
- Uniform, efficient heating
- Safe operation
- Easy field repair
- Multiple heaters can be installed for increased capacity
- Minimum pressure loss
- Safety agency approvals
- Explosion-proof, electrically-operated
- Accurate temperature read-out thermometer mounted in the fluid stream

© 2013 Nordson Corporation
All rights reserved

NH-4 Heaters

Benefits of Heating Coatings

Properly heating most coatings provides precise temperature control and improves product quality by ensuring uniform film build. In most cases, there is no need to change material thinners or viscosities for "summer and winter" blends.

- Heating the coating reduces the viscosity without the addition of solvents and thinners, and allows shorter flash and drying times.
- Heated coating systems allow for higher film builds for one coat while eliminating runs and sags.
- Heated coating is sprayed at lower hydraulic fluid pressures. Low-pressure, airless spraying provides the maximum control of the painting process and minimizes "bounce-back" and overspray.
- A uniform and controlled coating temperature is very important when applying high solid coatings. These coatings are temperature sensitive and can have a high-viscosity at 21 °C (70 °F). The quality of atomization is dramatically improved by heating high-solid coatings. By constantly circulating the material through the spray guns, the system is ready to use instantly without the need to readjust spray gun settings or waste the unheated material as in the case of dead-ended heated systems.

General Operation of a Nordson Hot Airless System

These are the major components of a hot airless finishing system:

- Air-driven hydraulic pump
- Explosion-proof heater
- Properly sized high-pressure filter
- Circulating spray gun
- Properly-sized spray nozzle and restrictor
- Dual-insulated hoses
- High-pressure circulation valve kit

This type of system provides constant circulation of coating material and fast clean up and/or color change—two to five minutes—depending on the length of the high-pressure circuit.

Finishing material is siphoned into the hydraulic pump from the original container and is constantly circulated through the heater, spray gun, circulation valve, and back into the pump intake. As heated coating material is sprayed from the closed high-pressure loop, fresh coating material is siphoned from the container and enters the high-pressure heated circuit. Heated coating is never returned to the drum so solvent evaporation is not a problem, and the coating viscosity is constantly controlled.

© 2013 Nordson Corporation
All rights reserved

NH-4 Heaters

Specifications

Properties	Standard	Twin Passage	Stainless Steel
Maximum Operating Pressure, bar (psi)	241 (3500)	241 (3500)	137 (2000)
Pipe-to-JIC Hose Fittings (included), in.	1/2-20 JIC	3/4-16 JIC	1/2-20 JIC
Fluid Body Inlet and Outlet Sizes	3/8-in. NPTF	1/2-in. NPTF	3/8-in. NPTF
Dimensions, mm (in.)			
Height	432 (17)	432 (17)	432 (17)
Width	175 (6.88)	175 (6.88)	175 (6.88)
Depth	232 (9.13)	232 (9.13)	232 (9.13)
Temperature			
Range, °C (°F)	18–83 (65–190)	18–83 (65–190)	18–83 (65–190)
Approximate heating capacity(1), l/hr (gal/hr)	45@56 °C Δ T (12@100 °F Δ T)	45@56 °C Δ T (12@100 °F Δ T)	45@56 °C Δ T (12@100 °F Δ T)
Electrical			
Watts	500, 1000, 1700		
Voltage, single phase, 50/60 Hz	115 V, 200 V, 230 V, 380 V, 460 V		
Amperes	15 @ 115 V, 9 @ 200 V, 8 @ 230 V,	5 @ 380 V, 5 @ 115 V, 5 @ 230 V 4 @ 460 V,	
Fluid Flow	Spiral with inlet at bottom of fluid body and outlet at top		

(1) Approximate heating capacity for typical solvent-based materials.

© 2013 Nordson Corporation
All rights reserved

NH-4 Heaters

Ordering Information

Standard NH-4 Heaters

Part	Description			
	Watts	Amps	Item	Agency Approval*
			115 Volt	
245672	1700	15	NH-4 heater	FM, cFMus
246238	500	5	NH-4 heater, twin-passage	FM
246490	1000	9	NH-4 heater, twin-passage	FM
			200 Volt	
245673	1700	9	NH-4 heater	FM
247477	1700	9	NH-4 heater, twin-passage	FM
			230 Volt	
245674	1700	8	NH-4 heater	FM, cFMus
247748	1700	8	NH-4 heater	ATEX
247478	1700	8	NH-4 heater, twin-passage	FM, cFMus
			380 Volt	
245675	1700	5	NH-4 heater	FM
			460 Volt	
245676	1700	4	NH-4 heater	FM
247480	1700	4	NH-4 heater, twin-passage	FM

*Agency approval codes:

ATEX — Europe
cFMus — Canada and US
FM — Factory Mutual United States
SAA — Australia

© 2013 Nordson Corporation
All rights reserved

NH-4 Heaters

NH-4 Stainless Steel Heaters

Part	Description			
	Watts	Amps	Item	Agency Approval*
			115 Volt	
712905	1700	15	NH-4 heater, single-passage	FM
			230 Volt	
246665	1700	8	NH-4 heater, single-passage	FM
238502	1700		NH-4 heater, single passage	ATEX
			460 Volt	
248334	1700	4	NH-4 heater, single-passage	FM

*Agency approval codes:

ATEX — Europe
CSA — Canadian Standards Association
FM — Factory Mutual United States
SAA — Australia

NH-4 Heaters (Japan Only)

Part	Description		
	Watts	Amps	Item
			200 Volt
246566	1700	9	NH-4 heater, standard, single-passage
246664	1700	9	NH-4 heater, stainless steel, single-passage
248162	1700	9	NH-4 heater, standard, twin-passage

External Adjustment Thermostat

NOTE: The external adjustment thermostat fits all NH-4 fluid heaters.

Part	Description
249489	External adjustment thermostat

© 2013 Nordson Corporation
All rights reserved

NH-4 Heaters

NH-4 Heaters, Replacement Kits, and Heater Cartridges

NOTE: Heaters are equipped with an internal temperature adjustment unless otherwise specified.

Heater		Replacement Kits			Heater Cartridge
Part	Type	Heat Limiter/ Thermostat	Thermostat	Reservoir Seal	
245672	Standard	106363	106283	106282	245634
246238	Standard, twin-passage	106363	106283	106310	246242
246490	Standard, twin-passage	106363	106283	106310	246492
245673	Standard	106363	106283	106282	245635
246566	Standard, Japan only	—	106362	106282	247532
246664	Stainless steel, Japan only	—	106362	—	247532
247477	Standard, twin-passage	106363	106283	106310	245635
245674	Standard	106363	106283	106282	245636
246665	Stainless steel	106356	—	106282	245636
247478	Standard, twin-passage	106363	106283	106310	245636
247748	Standard	106363	106283	106282	245636
245675	Standard	106363	106283	106282	245643
245676	Standard	106363	106283	106282	245637
248334	Stainless steel	106356	—	106282	245637
247480	Standard, twin passage	106363	106283	106310	245637
712905	Stainless steel, single passage	106356	—	—	245634
238502	Stainless steel, BASEEFA/ATEX	106356	—	106282	245636
248162	Standard, twin passage, Japan only	—	106362	106310	247532

© 2013 Nordson Corporation
All rights reserved

StediTherm Heaters

Description

NOTE: StediTherm heaters carry the ATEX II2G Ex d IIB 165°C (T3) Gb marking, and are available in Europe, Asia, Japan, and Latin America.

Availability in the U.S. is pending due to certification.

StediTherm fluid heaters are ideal for processing highly viscous materials that must be heated before application. The fluid heater is explosion–proof, and all wetted components are made of stainless steel. The heat exchanger can be easily separated from the electrical housing for easy maintenance or repair.



StediTherm Heater

Features

- **Process highly viscous materials that must be heated before application.**
- **Explosion-proof design provides added safety.**
- **Heat exchanger is easily removed for easy maintenance.**

Specifications

	1800 Watt Heater	3500 Watt Heater	3800 Watt Heater
Max. Voltage +/– 10%)	115	230	400 (3 Phase)
Max. Amperage (ampere)	16	16	6
Max. Wattage (kW)	1.8	3.5	3.8
Max. Temperature (°C/°F)	85/185	85/185	85/185
Max. Operating Pressure	6525 psi (450 bar)		
Connection Threads	⅜" NPSM		
Dimensions (LxWxH)	16 in x 9 in x 7 in (405mm x 220mm x 180mm)		
Weight	38.8 ibs (17.6 kg)		

© 2013 Nordson Corporation
All rights reserved

StediTherm Heaters

Ordering Information

Part	Description
1601899	Heater, StediTherm, 115V, 1800W
1601900	Heater, StediTherm, 230V, 3500W
1601901	Heater, StediTherm, 400V, 3800W
1601764	Wall-mount bracket kit

© 2013 Nordson Corporation
All rights reserved

Section 8
Color Changers, Regulators, and Valves

High-Pressure Color Change Manifolds 8-1
Description 8-1
Ordering Information 8-2

Low-Pressure Color Change Manifolds 8-3
Description 8-3
Features 8-3
Ordering Information 8-4
Configurable Manifolds 8-4

Universal Automatic Non-Conductive Regulator 8-5
Description 8-5
Specifications 8-5
Ordering Information 8-6

Fixed Orifice Regulator and Valves 8-7
Fixed Orifice Regulator 8-7
Fixed Orifice Valves 8-7
Ordering Information 8-8

Ball Valves 8-9
Description 8-9
Ordering Information 8-10

Circulation Valves 8-11
Description 8-11
Ordering Information 8-11

© 2013 Nordson Corporation
All rights reserved

Table of Contents

Miscellaneous Valves 8-13
Description 8-13
Quick Exhaust Valve 8-13
In-Line Check Valves 8-13
Ordering Information 8-13

Electro-Pneumatic Solenoid Valves 8-15
Description 8-15
Specifications 8-15
Ordering Information 8-16

Air Relay Valves 8-17
Description 8-17
Specifications 8-18
Ordering Information 8-18

Paint/Solvent Dump Valve 8-19
Description 8-19
Ordering Information 8-19

© 2013 Nordson Corporation
All rights reserved

High-Pressure Color Change Manifolds

Description

The color change manifold provides quick color changes with minimum coating loss. The manifold valve is air-actuated, which allows the color change manifold to be mounted in a hazardous area with no ignition risk.

The valve with check is a compact, high-cycle, airless spray valve. It can dispense solventborne or waterborne coatings. Use the valve with its fast trigger cycle as a common product finishing accessory or with ultra-high-speed applications.

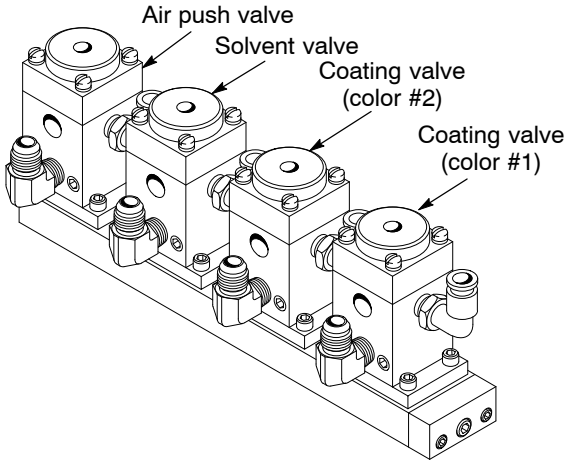

Non-Circulating Color Change Manifold

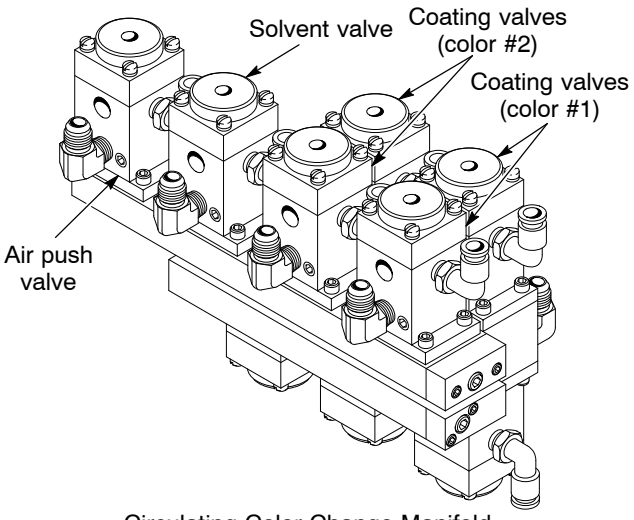

Circulating Color Change Manifold

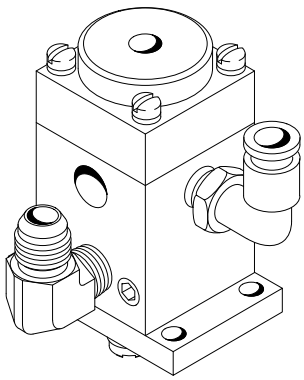

Valve with Check

© 2013 Nordson Corporation
All rights reserved

High-Pressure Color Change Manifolds

Ordering Information

Part	Description
	High-Pressure Systems
248269	Non-circulating manifold, hydraulic, four valves
248266	Circulating manifold, hydraulic, nine valves
248265	Circulating color module
248262	Valve with check

© 2013 Nordson Corporation
All rights reserved

Low-Pressure Color Change Manifolds

Description

The Nordson low-pressure color change manifolds are used in automatic spray devices. The low-pressure color change manifolds are made of plastic materials and compatible with waterborne or solvent-based materials. It is piloted by compressed air and can be configured in circulating, non-circulating, and combined versions.

Features

- Allows you to make quick color changes with minimum material coating loss
- Modular construction of the color changer allows you to increase or decrease the number of colors simply by adding or removing plates
- Non-conductive material structure allows mounting closer to the spray device

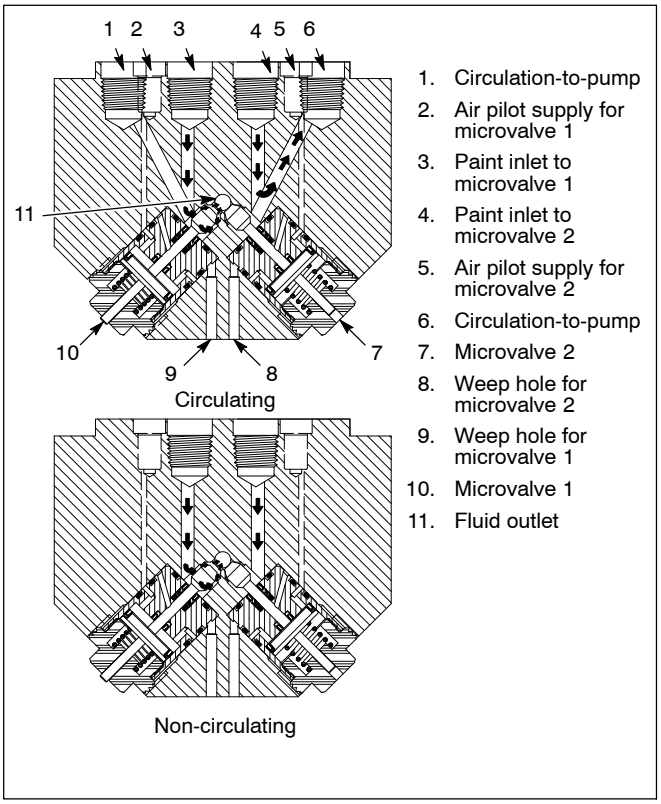

Fig. 1 Circulating and Non-Circulating Plates

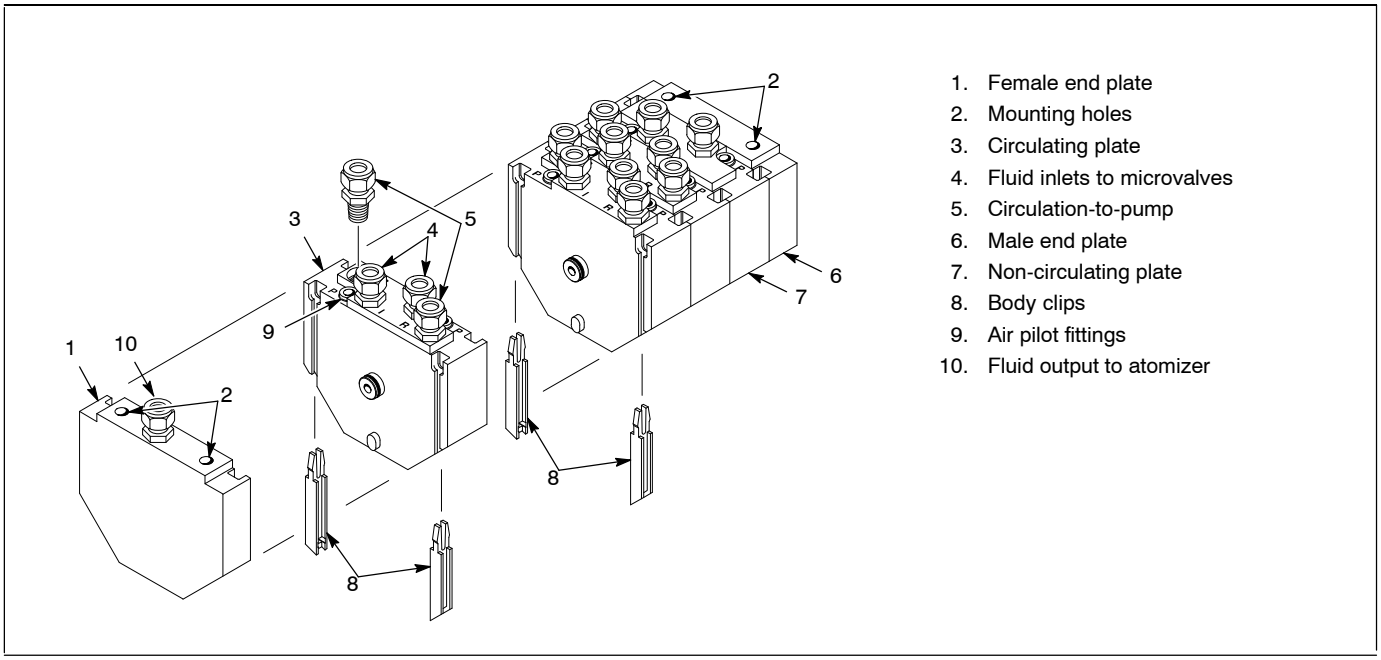

Fig. 2 Typical Color Changer

© 2013 Nordson Corporation
All rights reserved

Low-Pressure Color Change Manifolds

Ordering Information

Configurable Manifolds

Part	Description	Comments
	Plate Assembly Kits	
338286	Circulating plate assembly kit • Circulating plate assembly, qty. 1 • Body clip, qty. 2	This kit comes with one circulating plate assembly, and two body clips. Accommodates two colors per plate. Add additional circulating plates as required. See Figure 2, (3)
338287	Non-circulating plate assembly kit • Non-circulating plate assembly, qty. 1 • Body clip, qty. 2	This kit comes with one non-circulating plate assembly, and two body clips. Accommodates two colors per plate; can also be used as a solvent/air plate. Add additional non-circulating plates as required. See Figure 2, (7)
338288	Male end plate assembly kit • Male end plate assembly, qty. 1 • Body clip, qty. 2	This kit comes with one male end plate assembly, and two body clips. Only one male end plate kit per color changer is required for any number of valves. See Figure 2, (6)
333920	Female end plate assembly	Only one female end plate per color changer is required for any number of valves. See Figure 2, (1)
	Valve Removal Tool	
333893	Microvalve tool kit	Required to remove valves from the color changer. This tool is not included with the color changers and must be ordered separately.
	Optional Accessories	
338289	Plate assembly divider kit	May be placed between any circulating and/or non-circulating plates of the color changer. It is used to divide the color changer into two separate color changers and is typically used for two-component material, with resin on one side and the catalyst on the other side.
- - - - - -	Plural component system	The standard O-rings provided with your color changer may be incompatible with your paint or solvent and swell after exposure. Zalak O-rings may be required to eliminate swelling. • 333929 Zalak microvalve O-ring kit • 333905(1) Individual Zalak 0.156 x 0.094 x 0.344 • 333906(2) Individual Zalak 0.250 x 0.375 x 0.063

(1) Two O-rings are required per valve plate.

(2) One O-ring is required per valve plate and male plate.

© 2013 Nordson Corporation
All rights reserved

Universal Automatic Non-Conductive Regulator

Description

The universal automatic non-conductive regulator provides accurate, positive fluid pressure control to spray guns, dispensing valves, or atomizing heads. It is used to reduce main line pressure and maintain the desired fluid pressure to the spray gun or atomizing head. The regulator is electrically non-conductive, uses low-pressure air to operate, and is designed for both circulating and non-circulating systems.

Two mounting kits are available with the regulator. The spray gun mounting kit, to mount the regulator onto the back of an automatic Kinetix spray gun, and the gun bar mounting kit, to mount the regulator remotely for use with a variety of automatic spray guns.

NOTE: This regulator serves as a replacement for the Low-Pressure Fluid Regulator, part 333825.

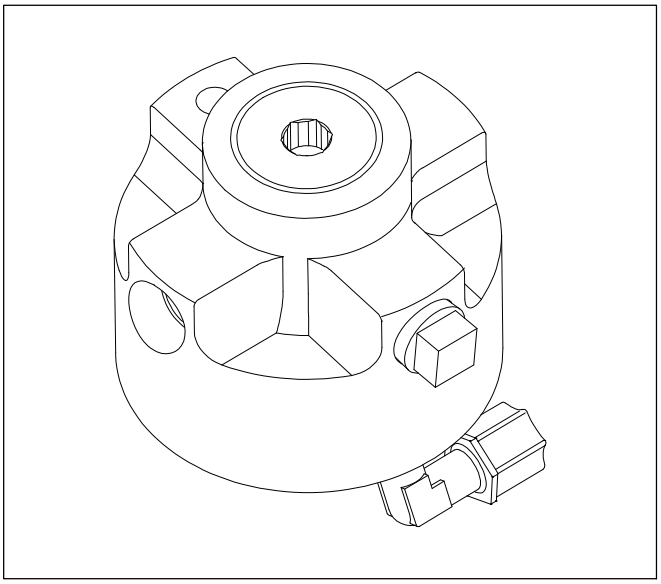

Specifications

Dimensions w/connectors, mm (in.)	
Height	6.2 (3.0)
Diameter	93.7 (3.690)
Weight, kg (lb)	0.55 (1.2)
Maximum Fluid Inlet Pressure, bar (psi)	17.2 (250)
Regulated Fluid Pressure Range, bar (psi)	0.34–6.9 (5–100)
Maximum Flow Capacity	5.3 l/min (1.4 gal/min) at 7 bar (100 psi) inlet pressure, and 3.5 bar (50 psi) regulated pressure
Wetted Parts	Tungsten carbide, Nylon, Delrin, Mylar, stainless steel, PTFE
Air Input	$^1/_8$-in. NPT
Fluid Input and Output	$^3/_8$-in. NPTF

© 2013 Nordson Corporation
All rights reserved

Universal Automatic Non-Conductive Regulator

Ordering Information

Part	Description
1087229	Universal non-conductive regulator assembly
1087228	Rebuild kit
1024656	Kinetix spray gun mounting kit
1024698	1-in. bar universal regulator mounting kit
1030198	2-in. bar universal regulator mounting kit

© 2013 Nordson Corporation
All rights reserved

Fixed Orifice Regulator and Valves

Fixed Orifice Regulator

The fixed orifice regulator allows an open-loop circulation path in a hydraulic system. Material is pumped through the hydraulic system to the fixed orifice regulator, where it is returned to the supply reservoir. The three-way ball valve allows the operator to dump waste fluid or solvent flush material out of the system.

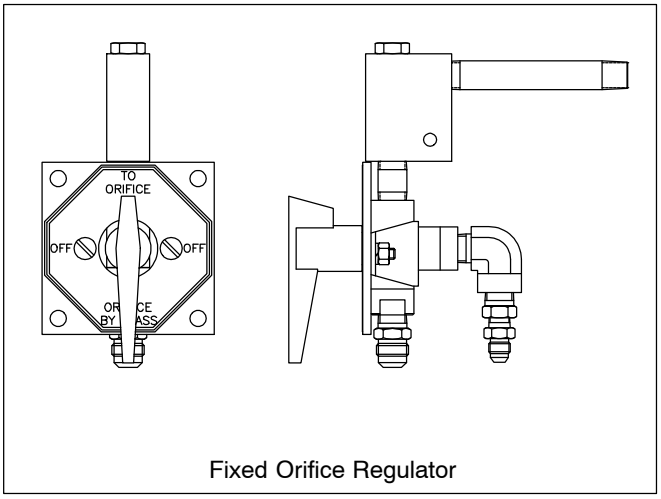

Fixed Orifice Regulator

Fixed Orifice Valves

The fixed orifice valve circulates coating material and mounts to a wall, pump, or pail. The valve maintains a fixed circulation rate.

A fixed orifice circulation valve is available in a variety of orifice sizes. This valve maintains a fixed circulation rate based on the size of the orifice installed.

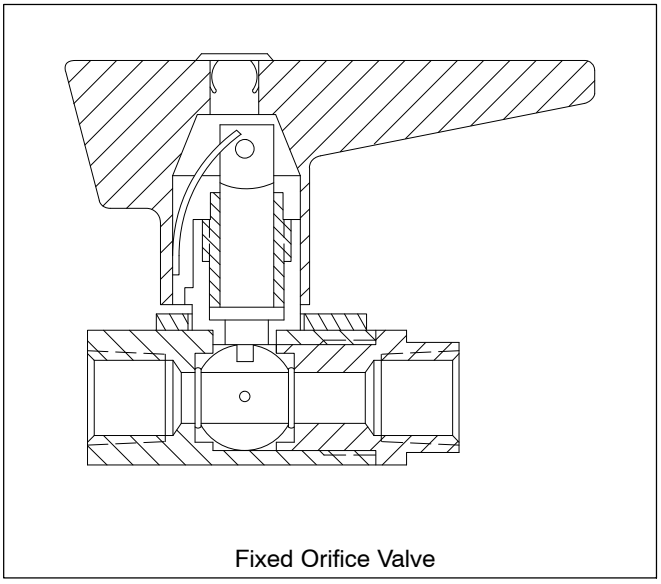

Fixed Orifice Valve

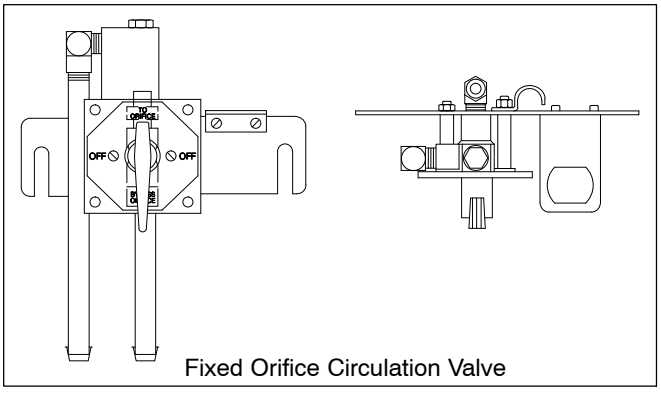

Fixed Orifice Circulation Valve

© 2013 Nordson Corporation
All rights reserved

Fixed Orifice Regulator and Valves

Ordering Information

NOTE: Orifices are not included with the circulation valve. Orifice kits must be ordered separately.

Part	Description
	Fixed Orifice Regulator
159933	Fixed orifice regulator
	Orifice Kits
248537	0.010
248538	0.012
248539	0.015
248540	0.018
248541	0.020
248542	0.025
248544	0.040
248545	0.050

© 2013 Nordson Corporation
All rights reserved

Ball Valves

Description

Nordson ball valves regulate fluid flow. They have standard $^{3}/_{8}$-in. NPT ports and PTFE seals. The 3-way ball valves change the direction of fluid flow. Each type of ball valve has a working pressure of 207 bar (3000 psi) and a maximum working temperature of 232 °C (450 °F).

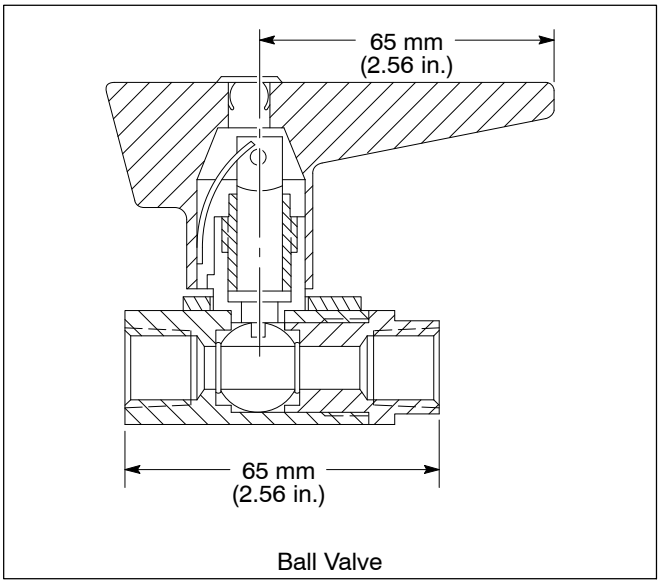

Ball Valve

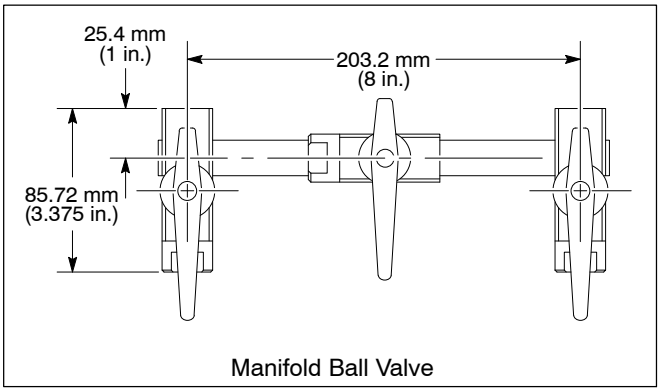

Manifold Ball Valve

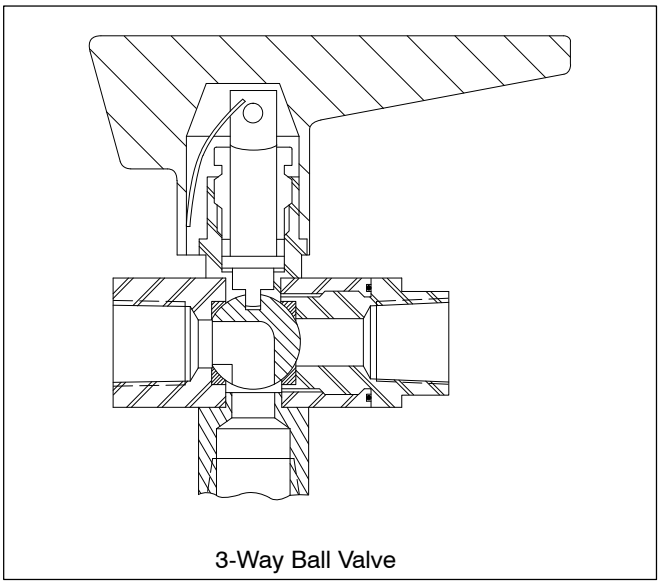

3-Way Ball Valve

© 2013 Nordson Corporation
All rights reserved

Ball Valves

Ordering Information

Part	Description	Note
	Ball Valves	
750040	Ball valve, nickel	
750130	Stainless steel	A
750067	Manifold ball valve, nickel-plated, with steel valves	
247948	3-way, ball valve	
247673	3-way, stainless steel	A
	Kit	
106251	Repair kit, with flat spring, stem packing, thrust washer, ball seat and body seat	B
	Options	
750055	Bracket	C

NOTE A: “316” is etched on the stem of the stainless steel ball valves for identification.
B: This kit is used with the ball valve and the manifold ball valve.
C: This bracket is used with the ball valve.

© 2013 Nordson Corporation
All rights reserved

Circulation Valves

Description

The single and dual high-pressure circulation valves provide a variable circulation rate of coating material.

The single circulation valve is for one spray device and the dual circulation valve is for two spray devices.

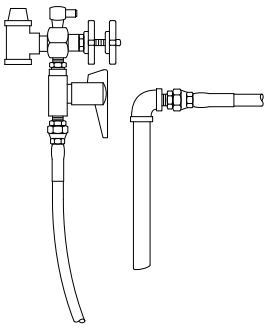

Single Circulation Valve

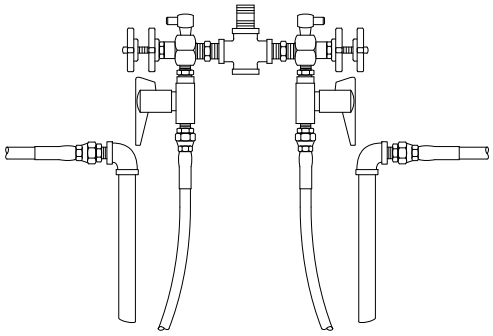

Dual Circulation Valve

Ordering Information

Part	Description
	Circulation Valves
244777	Single circulation kit, standard
244778	Single circulation kit, stainless steel
244779	High-pressure dual circulation kit, standard
244780	High-pressure dual circulation kit, stainless steel
750022	Circulation valve assembly
750222	Circulation valve assembly, stainless steel
	Kits
106244	Service kit, carbide seat, circulation valve
106251	Service kit, packing valve

© 2013 Nordson Corporation
All rights reserved

© 2013 Nordson Corporation
All rights reserved

Miscellaneous Valves

Description

The following additional valves are available.

Quick Exhaust Valve

The quick exhaust valve reduces the cycle time of an automatic spray device. The quick exhaust valve has an operating air pressure of 0.3–10.3 bar (4–150 psi) and a maximum operating speed of 400 cpm.

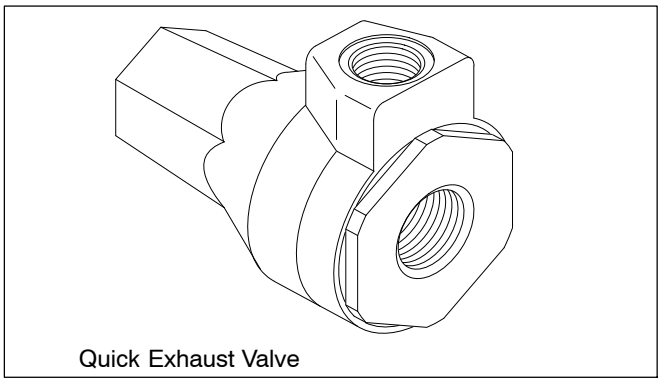

Quick Exhaust Valve

In-Line Check Valves

The in-line check valves helps to prevent fluid backflow.

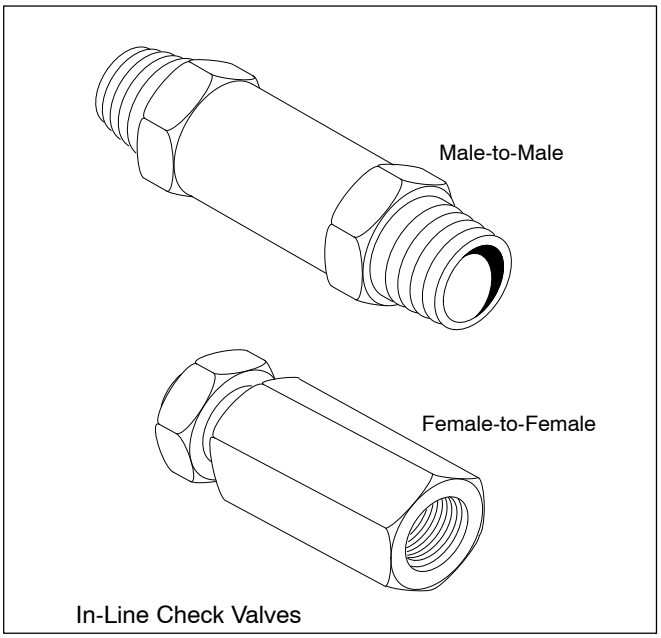

In-Line Check Valves

Ordering Information

Part	Description	Note
901262	Quick exhaust valve	
	In-Line Check Valves	
166930	Male-to-male, $^3/_8$-in. NPT x $^3/_8$-in. NPT, brass	A, D, E
166931	Male-to-male, $^3/_8$-in. NPT x $^3/_8$-in. NPT, stainless steel	A, D, E
338443	Female-to-female, $^3/_8$-in. NPT x $^3/_8$-in. NPT, brass	A, D, E
115799	Female-to-female, $^3/_8$-in. NPT x $^3/_8$-in. NPT, stainless steel	A, D, E
170736	Female-to-female, $^3/_4$-in. NPT x $^3/_4$-in. NPT, stainless steel	B, C, D, E

NOTE A: Poppet style.
B: Ball style.
C: Used only in slurry applications.
D: Rated to 3000 psi.
E: PTFE seal.

© 2013 Nordson Corporation
All rights reserved

© 2013 Nordson Corporation
All rights reserved

Electro-Pneumatic Solenoid Valves

Description

The solenoid valve is a three-way valve that converts an electrical signal from a control device to a pneumatic signal. The pneumatic signal causes an air cylinder to operate. The solenoid valve can be used alone or with an air-piloted three-way, air-relay valve or air-release valve for faster cycle operation.

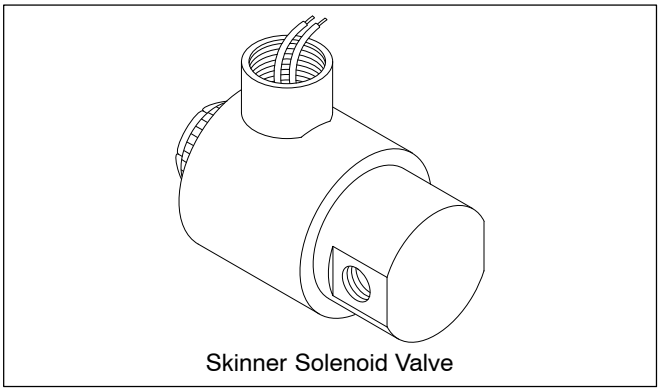

Skinner Solenoid Valve

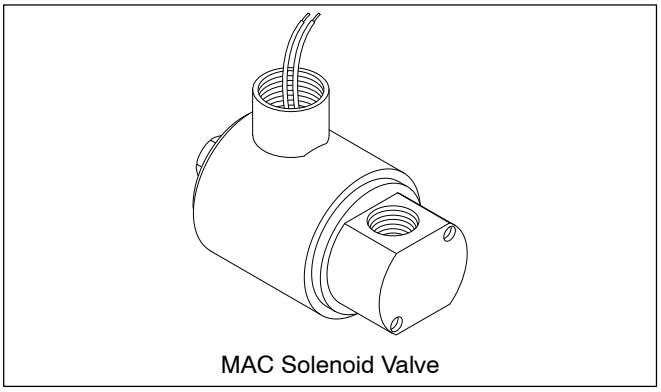

MAC Solenoid Valve

Specifications

Properties	Skinner	MAC
Maximum Operating Air Pressure, bar (psi)	6.90 (100)	10.34 (150)
(maximum operating air pressure for part 901080)	6.20 (90)	
Dimensions, mm (in.)		
Height	69.9 (2.75)	96.7 (3.81)
Width	55.6 (2.19)	57.2 (2.26)
Weight, kg (lb)	0.453 (1)	0.453 (1)
Temperature Range, °C (°F)	-40–82.2 (-40–180)	-40–82.2 (-40–180)
Response Time, msec		
ac to open or close	4–8	4–8
dc to open	10–15	10–15
dc to close	6–12	6–12
Operating Speed, cycles/min	Up to 600	Up to 600

© 2013 Nordson Corporation
All rights reserved

Electro-Pneumatic Solenoid Valves

Ordering Information

Part	Model	Cycles	Volts	Resistance, ohms	Explosion-proof	Note
901015	Skinner	60	120 ac	180	No	
901023	Skinner	—	24 dc	65	No	
901029	Skinner	50/60	220/240 ac	610	No	
1055481	MAC	50/60	115 ac	99–121	No	A, B
901093	MAC	—	24 dc	24	Yes	A

NOTE A: High-speed valves not requiring air-piloted, 3-way relay valves.
B: Replaced by 1055481.

© 2013 Nordson Corporation
All rights reserved

Air Relay Valves

Description

The air relay valve reduces the cycle time of an automatic spray device. Two speed types are available.

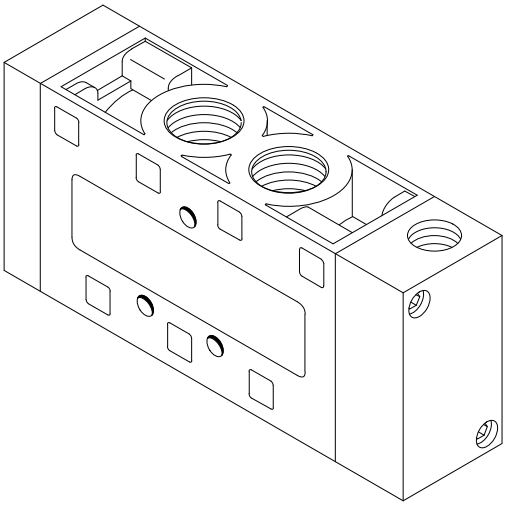

Very High-Speed Air Relay Valve

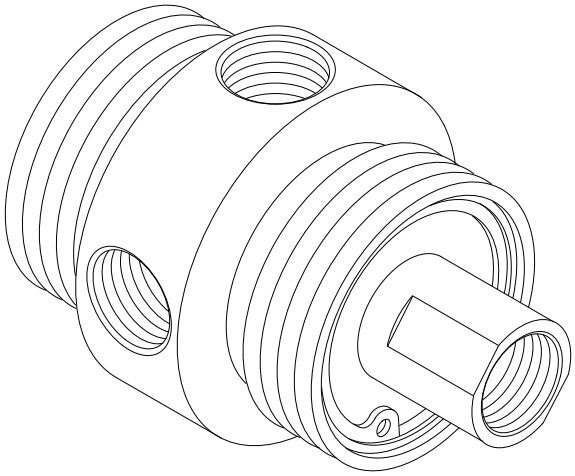

High-Speed Air Relay Valve

© 2013 Nordson Corporation
All rights reserved

Air Relay Valves

Specifications

Properties	Very High-Speed Air Relay Valve	High-Speed Air Relay Valve
Air Pressure, bar (psig)		
Operating	3.4–10 (50–145)	3.4–8.6 (50–125)
Minimum	2.4 (35)	2.4 (35)
Dimensions, mm (in.)		
Height	74.6 (2.94)	38.1 (1.5)
Width	50.8 (2.0)	—
Depth	25.4 (1)	—
Diameter	—	30.1 (1.19)
Maximum Operating Speed, cpm	1600	600
Air Filtration, microns	5	20

Ordering Information

Part	Description
901047	Air relay valve, very high-speed
901028	Air relay valve, high-speed

© 2013 Nordson Corporation
All rights reserved

Paint/Solvent Dump Valve

Description

The paint/solvent dump valve triggers or dumps coating material. The dump valve can actuate paint or solvent within the rotary atomizer, or two of these valves can be coupled for paint actuation and dump.

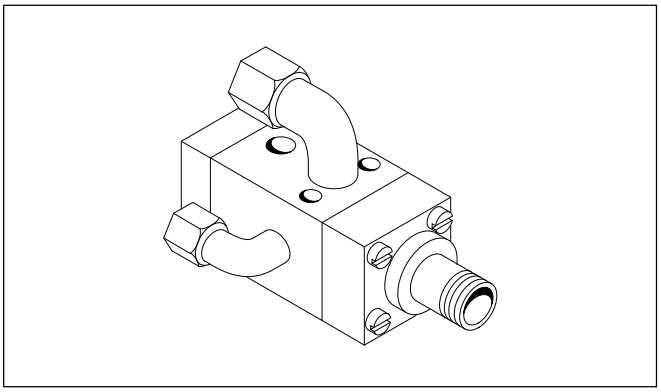

Ordering Information

Part	Description
119616	Paint/solvent dump valve

© 2013 Nordson Corporation
All rights reserved

© 2013 Nordson Corporation
All rights reserved

Section 9
Hoses and Fittings

Hoses **9-1**
High-Pressure Fluid Hoses 9-1
Low-Pressure Fluid Hoses 9-3
PTFE Fluid Hose 9-4
Isocore “B” Hose 9-4
Nordson-Approved PTFE Tubing for Kinetix and Trilogy Guns 9-5
Air Supply Hose 9-6
Grounded Air Hose with Fittings Installed 9-6
Low-Pressure Air Tubing 9-6

High-Pressure Hose Fittings **9-7**
Hose-to-Hose Connectors 9-7
Hose-to-Hose Swivel Elbows 9-7
Female Connector 9-8
Straight Pipe-to-Hose Connectors 9-9
Pipe-to-Hose Elbows 9-10
Circulation Block 9-11

High-Pressure Swivel Connectors **9-13**
Description 9-13
Specifications 9-13
Swivel Combination Selection 9-13
Small Swivels 9-14
Straight Swivels 9-15
Large Swivels 9-16
Swivel Assembly 9-17
Small Swivels 9-17
Large Swivels 9-17

© 2013 Nordson Corporation
All rights reserved

Table of Contents

High-Pressure Pipe Fittings 9-19
Nipples 9-19
Pipe Couplings 9-20
Male and Female Pipe Reducing Bushings 9-21
Male Reducers 9-22
Pipe Plugs 9-23
Street Elbows 9-24
90 Degree Elbows 9-25
Pipe Tees 9-26

High-Pressure Tube Fittings 9-27
Pipe-to-Tube Male Connectors 9-27
Pipe-to-Tube Male Elbows 9-28

Low-Pressure Pipe Fittings 9-29
Cross 9-29
Tees 9-29
Elbows 9-30
Street Elbows 9-30
Nipples 9-31
Bulkhead Fittings 9-32
Couplings 9-32

Low-Pressure Hose Fittings 9-33
Female Connectors 9-33
Female Swivel Connectors 9-33
Pipe-to-Hose Male Adapters 9-34
Hose-to-Hose Adapters 9-35
Quick Disconnect Air 9-36

Low-Pressure Tube Fittings 9-37
Pipe-to-Tube Male Elbows with Ferrule 9-37
Tube-to-Tube Connectors with Ferrule 9-37
Nut with Ferrule 9-38
Pipe-to-Tube Connectors with Ferrule 9-38
Tube-to-Pipe or Tube-to-Tube Tees with Ferrule 9-39
Female Pipe-to-Tube Connector with Ferrule 9-39

© 2013 Nordson Corporation
All rights reserved

Low-Pressure Air Fittings for Plastic Tube 9-41
Union Y 9-41
Union Tees 9-41
Branch Tees 9-42
Bulkhead Connector 9-42
Bulkhead Unions 9-43
Male Run Tees 9-43
Male Elbows 9-44
Male Connectors 9-45

Low-Pressure Plastic Fittings 9-47
Straight Male Connectors 9-47
Tube Nuts with Ferrule 9-48
Male Elbows 9-49
Male Branch Tees with Nuts 9-50
Grooving Tools for Low-Pressure Plastic Fittings 9-51
Elbows 9-52

Low Pressure PTFE Fittings for Kinetix and Trilogy Guns 9-53
Elbows 9-53
Bushing 9-53
Straight 9-54

Kinetix and Trilogy Hoses and Fittings 9-55
Air Hoses 9-55
Fluid Hoses and Accessories for Manual Spray Guns (Kit Part Numbers) 9-55
Fluid Hoses and Accessories for Automatic Spray Guns (Kit Part Numbers) 9-56
Air Tubing Option for Automatic Low-Pressure Spray Gun 9-56

Prism Fluid Hoses and Fittings 9-57
Black Rubber Hose 9-57
Nylon Single Layer Hose 9-57
Air Hose 9-57
Air Tubing 9-58

© 2013 Nordson Corporation
All rights reserved

Table of Contents

© 2013 Nordson Corporation
All rights reserved

Hoses

High-Pressure Fluid Hoses

- Most high-pressure fluid hoses have a maximum working pressure of 207 bar (3000 psi).
- The $^{1}/_{4}$ and $^{5}/_{16}$-in. PTFE hose has a maximum working pressure of 103 bar (1500 psi).

NOTE: Nylon hoses have stainless steel wetted components that are permanently attached. PTFE hoses have permanently attached stainless steel nipples and swivel nuts.

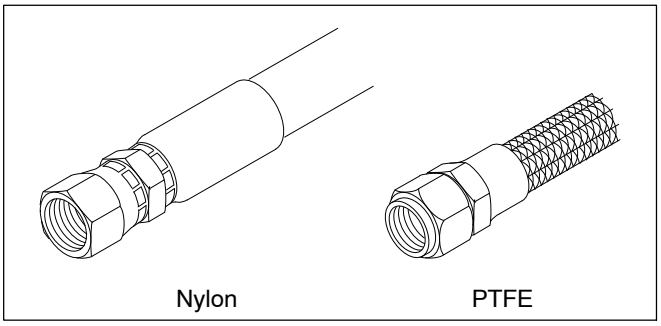

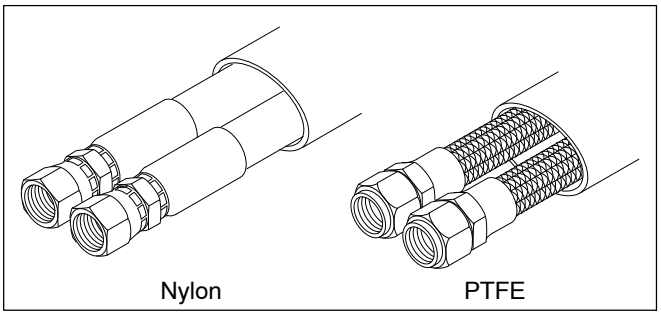

© 2013 Nordson Corporation
All rights reserved

Hoses

Length		Standard Hoses for Solvent-based Applications		Hoses with 316 Stainless Steel Inserts for Solvent and Waterborne Applications		
		PTFE		Nylon		
		ID (in.)		ID (in.)		
in	mm	1/4	5/16	3/16	1/4	3/8
12	305	842012	843012	- - - - - -	1084933	- - - - - -
24	610	842024	843024	1084945	1084936	1084955
36	914	842036	843036	1084946	1084937	1084956
48	1220	842048	843048	1084947	1084938	1084958
72	1830	842072	843072	1084948	1084939	1084959
96	2440	842096	843096	1084949	1084940	1085036
120	3040	842120	843120	1084950	1084941	1084961
180	4560	1078713	- - - - - -	1084951	1084942	1084962
300	7610	842300	- - - - - -	1084953	1084943	1084963
600	15200	- - - - - -	- - - - - -	- - - - - -	1084944	1084964
Working pressure		103 bar (1500 psi)		207 bar (3000 psi)		
Swivel (female JIC)		1/2–20 Note B	9/16–18 Note A	1/2–20 Note C	1/2–20 Note C	3/4–16 Note C

NOTE A: Electroless nickel-plated nipples and swivel nuts.
B: Stainless steel nipples and swivel nuts.
C: Stainless steel nipples and electroless nickle plated swivel nuts.

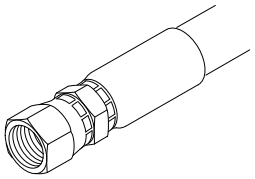

NYLON

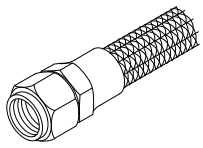

PTFE

© 2013 Nordson Corporation
All rights reserved

Hoses

Low-Pressure Fluid Hoses

- Black neoprene smooth cover
- Nylon fluid tube
- 14 bar (200 psi) maximum pressure
- Consists of a length of bulk hose and two female swivel fittings (shipped, not installed)
- Flexible rubber
- Used on manual or automatic spray systems

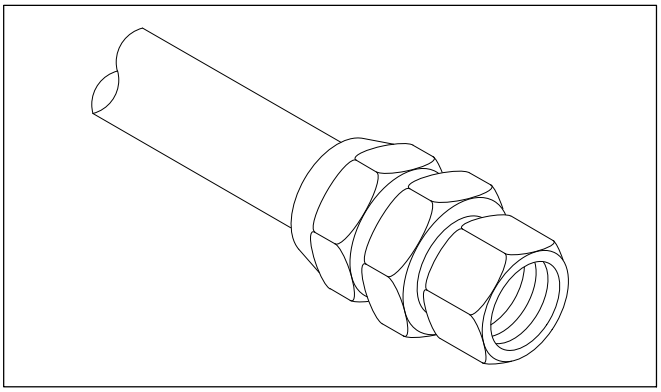

Part	ID, in.	OD, in.	Length, ft	Bulk Hose Part	Fitting
127015	1/4	1/2	4	900552	3/8-in. NPS (971764)
127332	1/4	1/2	8	900552	3/8-in. NPS (971764)
129479	1/4	1/2	25	900552	3/8-in. NPS (971764)

- Semi-transparent nylon paint hose
- 14 bar (200 psi) maximum pressure
- A length of bulk house and two female swivel fittings (shipped, not installed)
- Used on automatic spray systems only

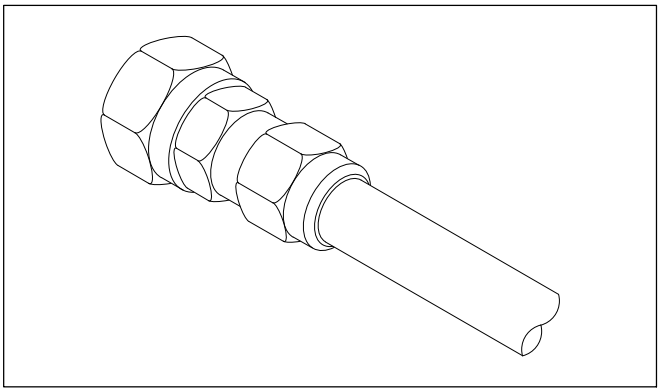

Part	ID, in.	Wall Size, in.	Length, ft	Bulk Hose Part	Fitting
129475	1/4	0.500	4	900531	3/8-in. NPS (971770)
129476	1/4	0.500	8	900531	3/8-in. NPS (971770)
129482	1/4	0.500	25	900531	3/8-in. NPS (971770)
129483	3/8	0.062	25	900520	3/8-in. NPS (971760)

© 2013 Nordson Corporation
All rights reserved

Hoses

PTFE Fluid Hose

- PTFE, PFA
- Used for dump line

Part	OD, in.	Description	Notes
900596	3/8	PTFE hose, clear	
900608	3/8	PTFE hose, natural	

NOTE A: Replaced by 900596

Isocore “B” Hose

Used on manual waterborne spray guns only.

Part	ID, in.	Length	Nut Size	Fitting Part	Description
900545	1/4	Bulk	3/8-in. NPS	106317	Hose, Isocore “B”

© 2013 Nordson Corporation
All rights reserved

Nordson-Approved PTFE Tubing for Kinetix and Trilogy Guns

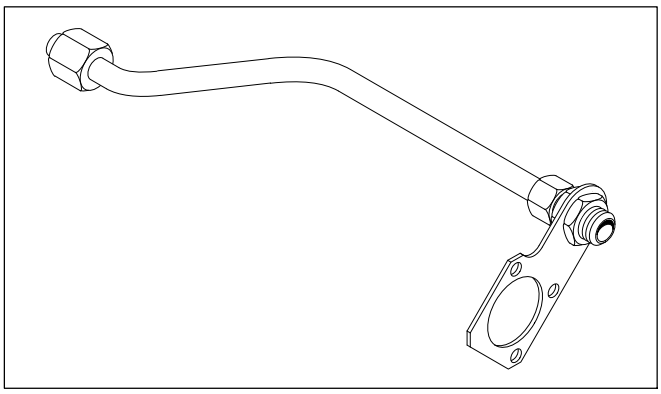

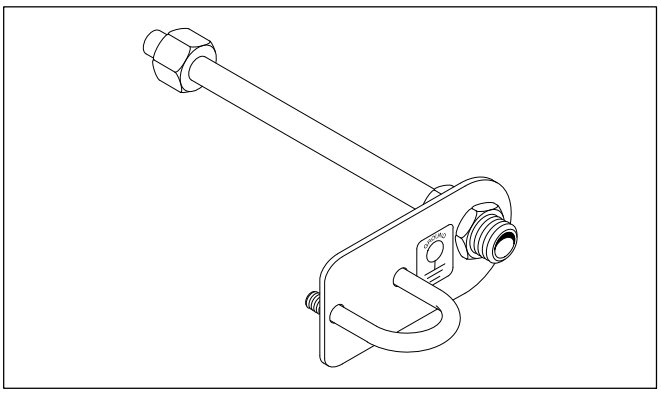

Part	ID, in.	OD, in.	Length, ft	Description
247877	$^{3}/_{16}$	$^{3}/_{8}$	16.00	Tubing, PTFE
248202	$^{3}/_{8}$	$^{9}/_{16}$	16.00	Tubing, PTFE

© 2013 Nordson Corporation
All rights reserved

Hoses

Air Supply Hose

- Smooth red cover
- Neoprene lining
- 14 bar (200 psi) maximum pressure
- Consists of a length of bulk hose and two female swivel fittings (shipped, not installed)

Part	ID, in.	OD, in.	Length, ft	Bulk Hose Part	Fitting
129486	$^{3}/_{8}$	$^{11}/_{16}$	25.0	800000	$^{1}/_{4}$-in. NPS (971768)
802060	$^{3}/_{4}$	$1^{1}/_{8}$	5.0	N/A	$1^{1}/_{16}$-16 JIC

Grounded Air Hose with Fittings Installed

Part	ID, in.	OD, in.	Length, ft	Fitting
247351	$^{1}/_{4}$	$^{1}/_{2}$	25	$^{1}/_{4}$-in. NPS

Low-Pressure Air Tubing

Part	OD, in.	Wall Thickness, in.	Material	Description
900556	$^{1}/_{4}$	0.035	Nylon	Air tubing, natural
900603	$^{1}/_{4}$	0.063	Polyurethane	Air tubing, clear
900534	$^{1}/_{4}$	0.040	Polyethylene	Air tubing, natural
900509	$^{1}/_{4}$	0.040	Polyethylene	Air tubing, black
900557	$^{3}/_{8}$	0.050	Nylon	Air tubing, natural
900511	$^{3}/_{8}$	0.062	Polyurethane	Air tubing, black
900602	$^{3}/_{8}$	0.063	Polyurethane	Air tubing, clear
900604	$^{1}/_{2}$	0.063	Polyethylene	Air tubing, clear
900513	$^{1}/_{2}$	0.064	Polyurethane	Air tubing, natural

© 2013 Nordson Corporation
All rights reserved

High-Pressure Hose Fittings

Hose-to-Hose Connectors

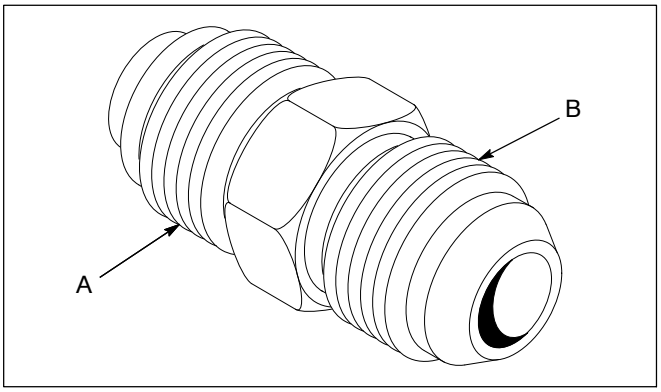

Part	Side A	Side B	Description
972350	1/2-20	1/2-20	Steel, zinc-plated for 3/16-in. and 1/4-in. hose
972360	1/2-20	1/2-20	316 stainless steel for 3/16-in. and 1/4-in. hose
972503	3/4-16	3/4-16	Steel, zinc-plated for 3/8-in. hose
972370	3/4-16	3/4-16	316 stainless steel for 3/8-in. hose
972107	1/2-20	3/4-16	Steel, zinc-plated for 3/16-in. and 1/4-in. hose

Hose-to-Hose Swivel Elbows

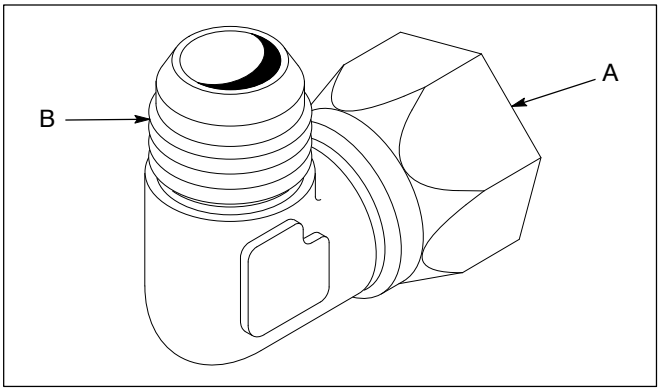

Part	Female A	Male B	Description
972353	1/2-20	1/2-20	Steel, zinc-plated for 3/16-in. and 1/4-in. hose
972400	9/16-18	9/16-18	Steel, zinc-plated for 5/16-in. PTFE Hose

© 2013 Nordson Corporation
All rights reserved

High-Pressure Hose Fittings

Female Connector

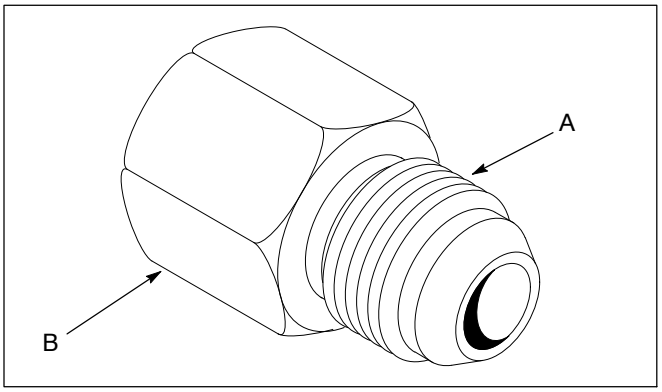

Part	Male A	Female B	Description
972719	$^{1}/_{2}$-20	$^{1}/_{4}$-in. NPT	Stainless steel for hose-to-female NPT

© 2013 Nordson Corporation
All rights reserved

High-Pressure Hose Fittings

Straight Pipe-to-Hose Connectors

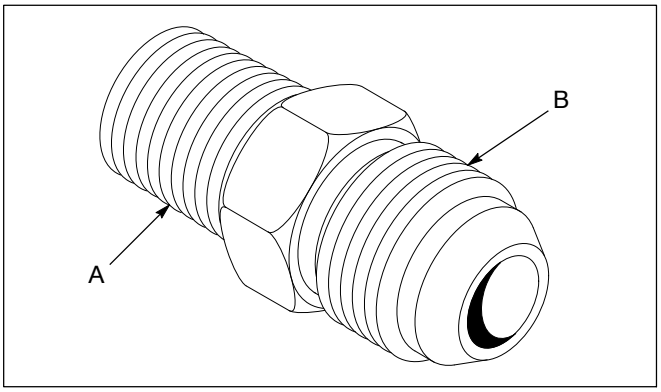

Part	Side A	Side B	Description
972025	1/4-in. NPT	1/2-20	Steel, zinc-plated for standard hose
972029	1/4-in. NPT	1/2-20	316 stainless steel for standard hose
972051	1/4-in. NPT	9/16-18	Brass, nickel-plated for 5/16-in. PTFE hose
972688	1/4-in. NPT	9/16-18	316 stainless steel for 5/16-in. PTFE hose
972106	1/4-in. NPT	3/4-16	Steel, zinc-plated for drain-off
972028	3/8-in. NPT	1/2-20	Steel, zinc-plated for standard hose
972052	3/8-in. NPT	9/16-18	316 stainless steel for 5/16-in. PTFE hose
972101	3/8-in. NPT	3/4-16	Steel, zinc-plated for drain-off
972103	3/8-in. NPT	3/4-16	316 stainless steel for drain-off
972100	1/2-in. NPT	7/8-14	Steel, zinc-plated for siphon
972102	1/2-in. NPT	7/8-14	316 stainless steel for siphon
972108	1/2-in. NPT	3/4-16	Steel, zinc-plated for NH-4 dual-passage heater
972105	3/4-in. NPT	1 1/16-12	Steel, zinc-plated for 25B 2:1 and 4:1 pump
972110	3/4-in. NPT	1 1/16-12	316 stainless steel 25B 2:1 and 4:1 pump
972111	3/4-in. NPT	7/8-14	Steel, zinc-plated for siphon
972112	3/4-in. NPT	7/8-14	316 stainless steel for siphon

© 2013 Nordson Corporation
All rights reserved

High-Pressure Hose Fittings

Pipe-to-Hose Elbows

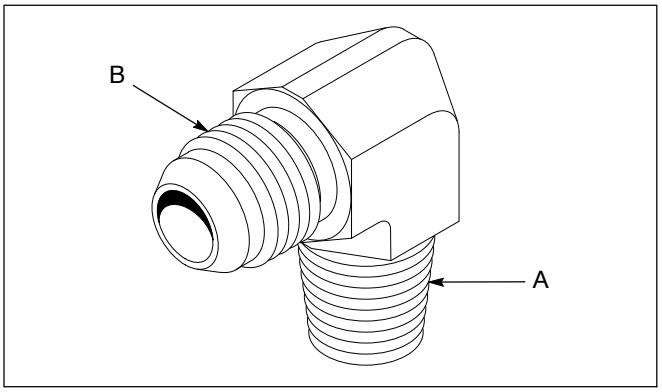

Part	Side A	Side B	Description
972254	1/4-in. NPT	3/4-16	Steel, zinc-plated
972176	1/4-in. NPT	1/2-20	Steel, zinc-plated for standard hose
972177	1/4-in. NPT	1/2-20	Stainless steel for standard hose
972200	1/4-in. NPT	9/16-18	Steel, zinc-plated for 5/16-in. PTFE hose
972255	3/8-in. NPT	3/4-16	Steel, zinc-plated for drain-off
972180	3/8-in. NPT	1/2-20	Steel, nickel-plated corrosion resistant
972583	3/4-in. NPT	1 1/16-12	Steel, nickel-plated for 25B 2:1 and 4:1 pump
972603	3/4-in. NPT	1 1/16-12	316 stainless steel for 25B 2:1 and 4:1 pump
972598	3/4-in. NPT	7/8-14	Steel, zinc-plated for siphon
972599	3/4-in. NPT	7/8-14	316 stainless steel for siphon
972251	1/2-in. NPT	7/8-14	Steel, zinc-plated for siphon
972252	1/2-in. NPT	7/8-14	316 stainless steel for siphon

© 2013 Nordson Corporation
All rights reserved

High-Pressure Hose Fittings

Circulation Block

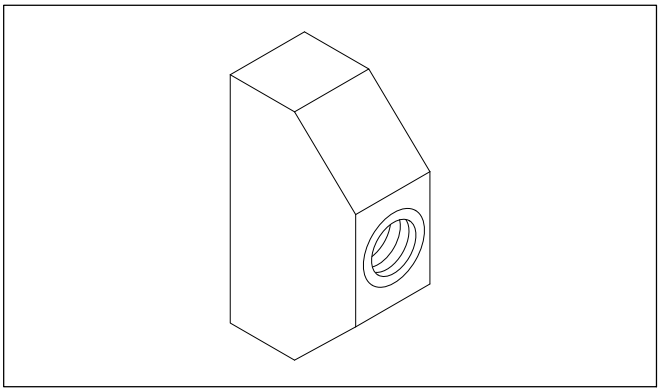

Part	Size	Material
244904	$^1/_4$-in. NPT	Aluminum

© 2013 Nordson Corporation
All rights reserved

© 2013 Nordson Corporation
All rights reserved

High-Pressure Swivel Connectors

Description

NOTE: The figures in this section are for general reference only.

High-pressure fluid swivel connectors can be used in a variety of different combinations, and with other high-pressure fittings or adapters. They are not pressure-balanced and therefore move more freely when the system is open and the application device is in use.

Depending on your requirements for coupling size and fitting type, you may purchase these modular swivels separately and assemble them according to your application needs. The types of connectors, sizes, and part numbers are listed in this document.

Specifications

Maximum fluid temperature: 450 °F (232 °C)
Maximum pressure: 4000 psi (276 bar)

Swivel Combination Selection

Table 1 shows the standard measurements for JIC tube fittings. Use this information to select swivel connectors from the tables in this document.

Table 1 JIC Tube Fittings

Dash Numbers (JIC-)	Tube OD (in.)	Straight Thread
5	$^{5}/_{16}$	$^{1}/_{2}$-20
6	$^{3}/_{8}$	$^{9}/_{16}$-18
8	$^{1}/_{2}$	$^{3}/_{4}$-16
10	$^{5}/_{8}$	$^{7}/_{8}$-14
12	$^{3}/_{4}$	$1^{1}/_{16}$-12
20	$1^{1}/_{4}$	$1^{5}/_{8}$-12

© 2013 Nordson Corporation
All rights reserved

High-Pressure Swivel Connections

Small Swivels

1. See Figure and Table below. Choose one elbow swivel (1) as the basis for your assembly.
2. Add one straight swivel (2) to the elbow to create a two-plane assembly or add an elbow swivel (3) and a straight swivel (2) to create a three-plane assembly.

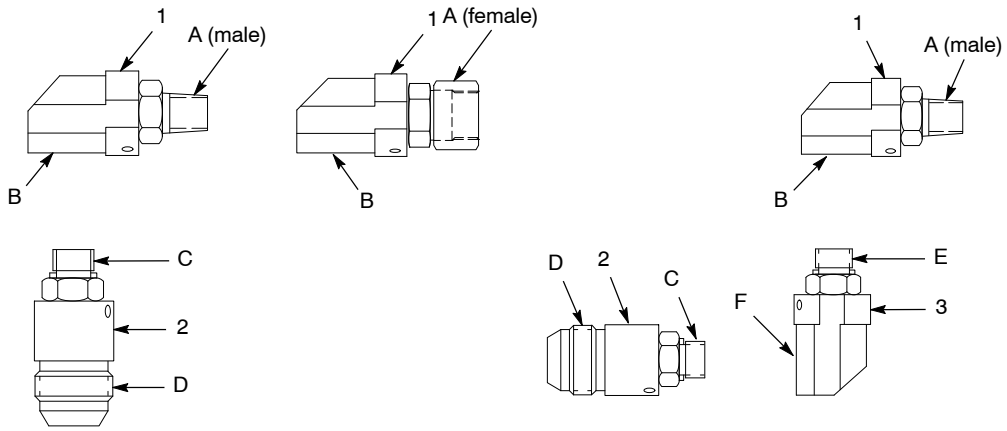

Item	Part	Swivel End	Swivel End	Note
		A	B	
1	139105	$^1/_4$ in. NPT (male)	SAE-6 (female)	
	139112	$^3/_8$ in. NPT (male)		
	139098	$^3/_8$ in. NPSM (female)		A
	139091	SAE-6 (male)		
		C	D	
2	139092	SAE-6 (male)	JIC-5 (male)	B
	139093		JIC-6 (male)	B
	139094		JIC-8 (male)	B
	139095		JIC-10 (male)	B
	139096		JIC-12 (male)	B
	139097		JIC-20 (male)	B
		E	F	
3	139091	SAE-6 (male)	SAE-6 (female)	

NOTE A: Use this swivel with the standard Pro-Flo trim set outlet or other compatible adapter.
B: These straight swivels can also be used alone as single swivels.

© 2013 Nordson Corporation
All rights reserved

High-Pressure Swivel Connections

Straight Swivels

See Figure Figure and Table below for straight swivel connectors.

NOTE: These swivels cannot be combined with any other swivels.

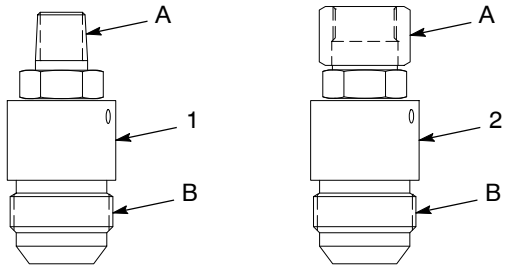

Item	Part	Swivel End A	Swivel End B	Note
1	139106	$^1/_4$ in. NPT (male)	JIC-5 (male)	
	139107		JIC-6 (male)	
	139108		JIC-8 (male)	
	139109		JIC-10 (male)	
	139110		JIC-12 (male)	
	139111		JIC-20 (male)	
1	139113	$^3/_8$ in. NPT (male)	JIC-5 (male)	A
	139114		JIC-6 (male)	A
	139115		JIC-8 (male)	A
	139116		JIC-10 (male)	A
	139117		JIC-12 (male)	A
	139118		JIC-20 (male)	A
2	139099	$^3/_8$ in. NPSM (female)	JIC-5 (male)	
	139100		JIC-6 (male)	
	139101		JIC-8 (male)	
	139102		JIC-10 (male)	
	139103		JIC-12 (male)	
	139104		JIC-20 (male)	
NOTE A: Use item 1 for reference. This swivel looks identical to item 1 but varies in size.				

© 2013 Nordson Corporation
All rights reserved

High-Pressure Swivel Connections

Large Swivels

1. See Figure and Table below. Choose one elbow swivel (1) as the basis for your assembly.
2. Add one straight swivel (2) to the elbow to create a two-plane assembly or add an elbow swivel (3) and a straight swivel (2) to create a three-plane assembly.

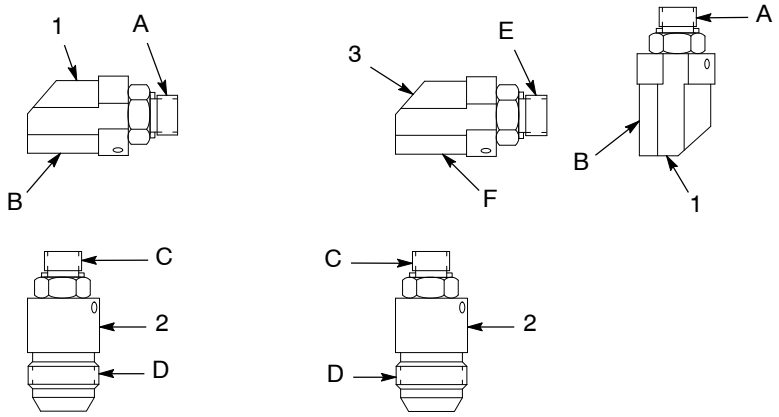

Item	Part	Swivel End	Swivel End	Note
		A	**B**	
1	153795	SAE-10 (male)	SAE-12 (female)	
	153794	SAE-12 (male)	SAE-12 (female)	
		C	**D**	
2	153796	SAE-12 (male)	JIC-10 (male)	A
	153799	SAE-12 (male)	JIC-20 (male)	A
	153800	SAE-12 (male)	JIC-16 (male)	A
	155469	SAE-12 (male)	JIC-24 (male)	A
	175589	SAE-10 (male)	JIC-10 (male)	A, B
	163496	SAE-10 (male)	JIC-16 (male)	A, B
		E	**F**	
3	153794	SAE-12 (male)	SAE-12 (female)	

NOTE A: These straight swivels can be used as single swivels.

B: This large straight swivel can only be used as a single swivel and cannot be used to configure two- and three-plane assemblies. Use item 2 for reference only — this swivel cannot be joined with an elbow.

© 2013 Nordson Corporation
All rights reserved

High-Pressure Swivel Connections

Swivel Assembly

To prepare and assemble the two- and three-plane swivel assemblies, perform the following procedures based on swivel size.

Small Swivels

WARNING: Once assembled, these swivels must not be disassembled. Failure to follow this instruction could result in leakage, swivel damage, component damage, or personal injury.

The callouts in this procedure refer to the assembly items listed in Table below. Use the following procedures to assemble small swivels.

1. Verify the swivel configuration and that the connectors are compatible before assembling them. Use the proper size O-rings (1) for the SAE-6 connectors.
2. Apply cleaner or primer (2) to the threads of the parts to be fitted.
3. Apply threadlocking adhesive (3) to the threads of the parts to be fitted.
4. Install the parts by hand and tighten until the O-ring begins to be compressed.
5. Tighten the swivel connectors lightly with a wrench.
6. Allow the thread sealant to dry for 90 minutes before using the swivel assembly.

Item	Part	Description
1	945082	O-ring, Viton, black, $^3/_8$ tube (SAE-6)
1	945025	O-ring, Viton, $^5/_8$ tube (SAE-10)
1	945039	O-ring, Viton, $^3/_4$ tube (SAE-12)
2	900455	Primer, thread adhesive
3	900470	Adhesive, threadlocking

Large Swivels

WARNING: You must use a swivel lock key to install large SAE swivel connectors. Without the lock key, the connection could loosen and leak, creating a hazard to personnel in the area.

Use the following procedures to assemble large swivels. You may disassemble the large swivel assemblies if you re-install the swivel lock key as detailed in these procedures.

1. Make sure that your swivel configuration is correct and that the connectors are compatible before assembling them. Use the proper size O-ring for the SAE-10 and SAE-12 connectors. Refer to Table on this page for O-ring ordering information.
2. See Figure below. Remove the cap screw and swivel lock key (1) from the elbow swivel.
3. Assemble the parts by hand and tighten the SAE connection until the O-ring compresses slightly.
4. Tighten the SAE connection with a wrench. Do not overtighten.

NOTE: Locate the two tapped holes (4) on the elbow swivel, near the SAE connection. Use only one hole to secure the swivel lock key (1) to the elbow swivel.

5. Position the swivel lock key so the cutout (2) rests against the SAE hex (5).
6. Move the swivel lock key (1) so the slot (3) aligns with one of the two tapped holes (4) in the elbow swivel. Install and tighten the cap screw in this hole.
7. Repeat steps 1–6, as needed, when assembling three-plane swivels to attach each additional swivel lock key.

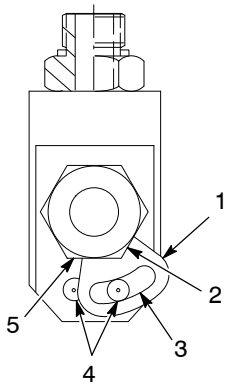

© 2013 Nordson Corporation
All rights reserved

© 2013 Nordson Corporation
All rights reserved

High-Pressure Pipe Fittings

Nipples

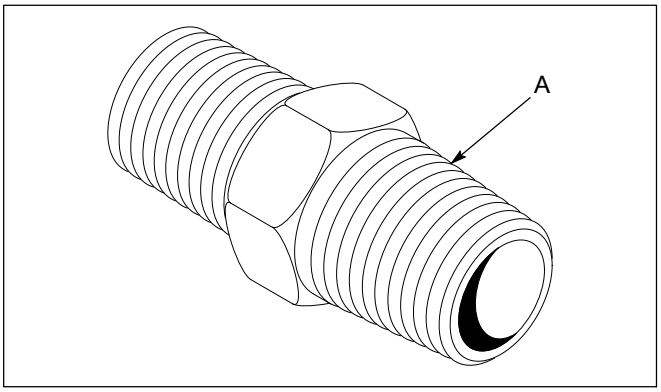

Part	Side A	Length	Material
973001	1/8-in. NPT	2 1/2 in.	Steel, zinc-plated
973002	1/8-in. NPT	1 1/2 in.	Steel, zinc-plated
973026	1/4-in. NPT	7/8 in.	Steel, zinc-plated
973029	1/4-in. NPT	1 29/64-in. hex	316 stainless steel
973034	1/4-in. NPT	1 11/16-in. hex	Steel, zinc-plated
973037	1/4-in. NPT	1 29/64-in. hex	Steel, zinc-plated
973050	3/8-in. NPT	1 in.	Steel, nickel-plated
973051	3/8-in. NPT	1 1/2 in.	Steel, zinc-plated
973052	3/8-in. NPT	2 1/2 in.	Steel, zinc-plated
973053	3/8-in. NPT	3 in.	Steel, zinc-plated
973059	3/8-in. NPT	1 29/64-in. hex	316 stainless steel
973081	1/2-in. NPT	Close, 57/64-in. hex	Steel, zinc-plated

© 2013 Nordson Corporation
All rights reserved

High-Pressure Pipe Fittings

Pipe Couplings

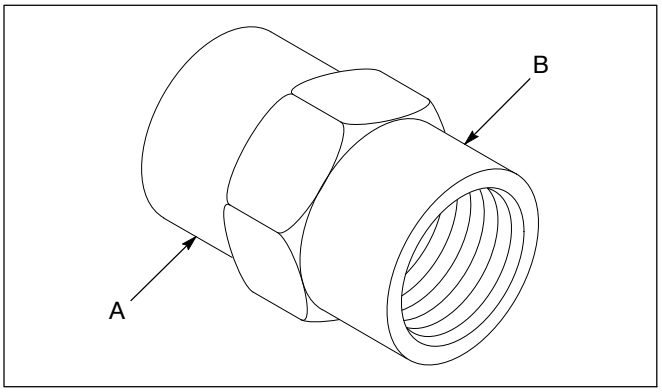

Part	Side A	Side B	Material
973572	1/8-in. NPT	1/8-in. NPT	Steel, zinc-plated
973500	1/4-in. NPT	1/4-in. NPT	Steel, zinc-plated
973189	1/4-in. NPT	1/4-in. NPT	316 stainless steel
973522	1/4-in. NPT	3/8-in. NPT	Steel, zinc-plated
973521	1/4-in. NPT	3/8-in. NPT	316 stainless steel
973520	3/8-in. NPT	3/8-in. NPT	Steel, zinc-plated
973523	3/8-in. NPT	3/8-in. NPT	316 stainless steel
973525	1/4-in. NPT	1/2-in. NPT	Steel, zinc-plated
973190	1/4-in. NPT	1/2-in. NPT	316 stainless steel

© 2013 Nordson Corporation
All rights reserved

High-Pressure Pipe Fittings

Male and Female Pipe Reducing Bushings

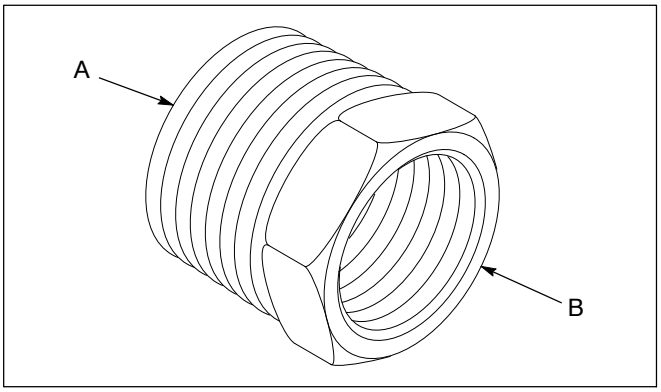

Part	Male A	Female B	Material
973370	3/8-in. NPT	1/4-in. NPT	Steel, galvanized
973372	1/4-in. NPT	1/8-in. NPT	Steel, zinc-plated
973626	1/4-in. NPT	1/8-in. NPT	316 stainless steel
973373	3/8-in. NPT	1/8-in. NPT	Steel, zinc-plated
973562	3/8-in. NPT	1/4-in. NPT	Steel, zinc-plated
973371	3/8-in. NPT	1/4-in. NPT	316 stainless steel
973084	1/2-in. NPT	3/8-in. NPT	Steel, zinc-plated
973609	1/2-in. NPT	3/8-in. NPT	316 stainless steel
973417	3/4-in. NPT	3/8-in. NPT	Steel, zinc-plated
973399	3/4-in. NPT	1/2-in. NPT	Steel, zinc-plated

© 2013 Nordson Corporation
All rights reserved

High-Pressure Pipe Fittings

Male Reducers

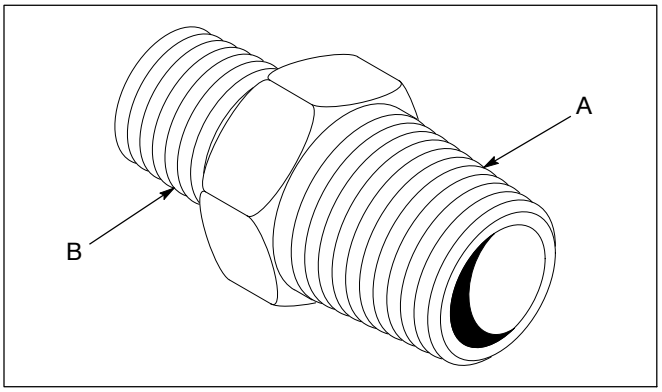

Part	Side A	Side B	Material
973958	$^3/_8$-in. NPT	$^1/_4$-in. NPT	Steel, zinc-plated
973963	$^1/_2$-in. NPT	$^1/_4$-in. NPT	Steel, zinc-plated
973961	$^3/_4$-in. NPT	$^1/_2$-in. NPT	Steel, zinc-plated

© 2013 Nordson Corporation
All rights reserved

Pipe Plugs

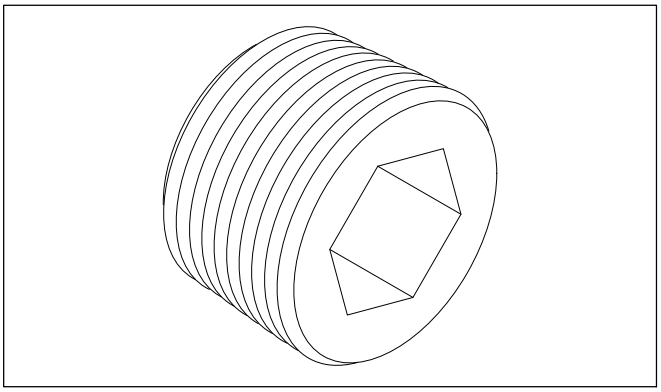

Part	Description	Material
973403	1/16-in. NPTF, hex, center sunk	Steel, zinc-plated, flush, 7/8-in. taper
973400	1/8-in. NPTF, square	Steel
973570	1/8-in. NPTF, square	Delrin
973402	1/8-in. NPTF, hex, center sunk	Steel, zinc-plated, flush, 7/8-in. taper
703190	1/8-in. NPTF, hex, center sunk	316 stainless steel, flush, 7/8-in. taper
973414	1/4-in. NPTF, square	Steel, zinc-plated
973412	1/4-in. NPTF, square	Delrin
973410	1/4-in. NPTF, hex, center sunk	Steel, zinc-plated, standard, 3/4-in. taper
973411	1/4-in. NPTF, hex, center sunk	Steel, zinc-plated, flush, 7/8-in. taper
973415	1/4-in. NPTF, hex, center sunk	316 stainless steel
703191	1/4-in. NPTF, hex, center sunk	316 stainless steel, flush, 7/8-in. taper
973422	3/8-in. NPTF, hex, center sunk	Steel, zinc-plated, standard, 7/8-in. taper
973423	3/8-in. NPTF, hex, center sunk	Stainless steel, standard 3/4-in. taper
973430	1/2-in. NPTF, square	Steel
973434	1/2-in. NPTF, square	316 stainless steel
973431	1/2-in. NPTF, hex, center sunk	Steel, zinc-plated, standard, 3/4-in. taper
973567	3/4-in. NPTF, square	Steel, zinc-plated
973443	1-in. NPTF, hex, center sunk	Steel, zinc-plated, flush, 7/8-in. taper

© 2013 Nordson Corporation
All rights reserved

High-Pressure Pipe Fittings

Street Elbows

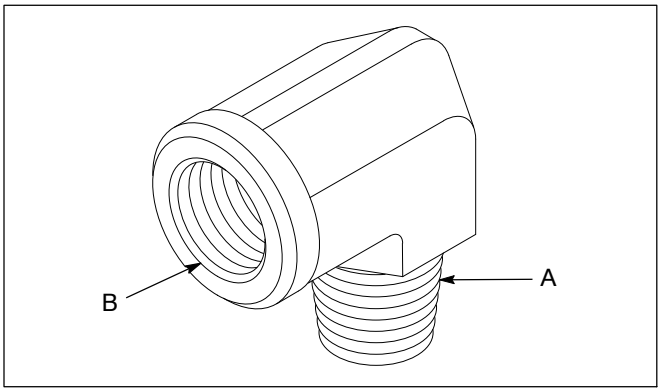

Part	Male A	Female B	Material
973126	1/8-in. NPT	1/8-in. NPT	Steel, zinc-plated
973151	1/4-in. NPT	1/4-in. NPT	Steel, zinc-plated
973154	1/4-in. NPT	1/4-in. NPT	316 stainless steel
973175	3/8-in. NPT	3/8-in. NPT	Steel, zinc-plated
973180	3/8-in. NPT	3/8-in. NPT	316 stainless steel
973128	1/2-in. NPT	1/2-in. NPT	Steel, zinc-plated
973192	1/2-in. NPT	1/2-in. NPT	316 stainless steel
973226	3/4-in. NPT	3/4-in. NPT	Steel, zinc-plated

© 2013 Nordson Corporation
All rights reserved

High-Pressure Pipe Fittings

90 Degree Elbows

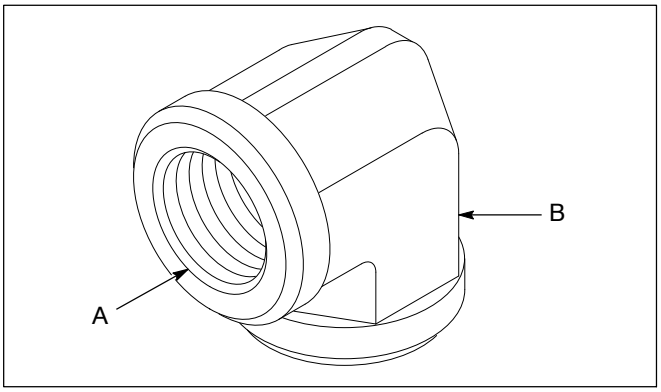

Part	Side A	Side B	Material
973130	1/8-in. NPT	1/8-in. NPT	Steel, zinc-plated
973153	1/4-in. NPT	1/4-in. NPT	Steel, zinc-plated
973179	3/8-in. NPT	3/8-in. NPT	Steel, zinc-plated
973176	3/8-in. NPT	3/8-in. NPT	316 stainless steel
973127	1/2-in. NPT	1/2-in. NPT	Steel, zinc-plated
973232	3/4-in. NPT	3/4-in. NPT	316 stainless steel

© 2013 Nordson Corporation
All rights reserved

High-Pressure Pipe Fittings

Pipe Tees

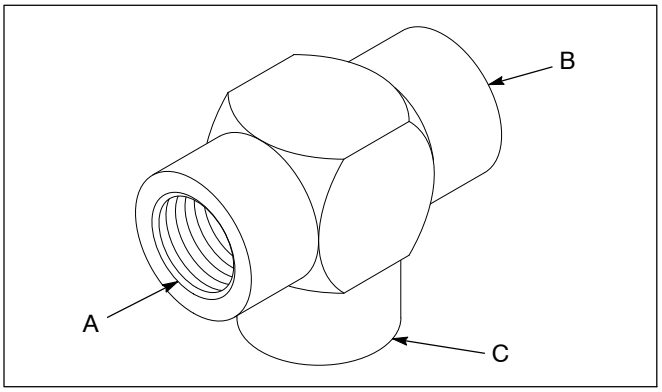

Part	Sides A & B	Side C	Material
973250	1/8-in. NPT	1/8-in. NPT	Steel, zinc-plated
973298	1/8-in. NPT	1/8-in. NPT	316 stainless steel
973260	1/4-in. NPT	1/4-in. NPT	Steel, zinc-plated
704829	1/4-in. NPT	1/4-in. NPT	316 stainless steel
973273	3/8-in. NPT	3/8-in. NPT	Steel, zinc-plated, 138 bar (2000 psi) maximum
973083	3/8-in. NPT	3/8-in. NPT	Steel, zinc-plated
973266	3/8-in. NPT	3/8-in. NPT	316 stainless steel
973282	1/2-in. NPT	1/2-in. NPT	Steel, zinc-plated
973284	1/2-in. NPT	1/2-in. NPT	316 stainless steel
973265	3/4-in. NPT	3/4-in. NPT	Steel, zinc-plated
973293	3/4-in. NPT	1/2-in. NPT	Steel, zinc-plated, for circulation valve

© 2013 Nordson Corporation
All rights reserved

Pipe-to-Tube Male Connectors

For use with seamless steel tube.

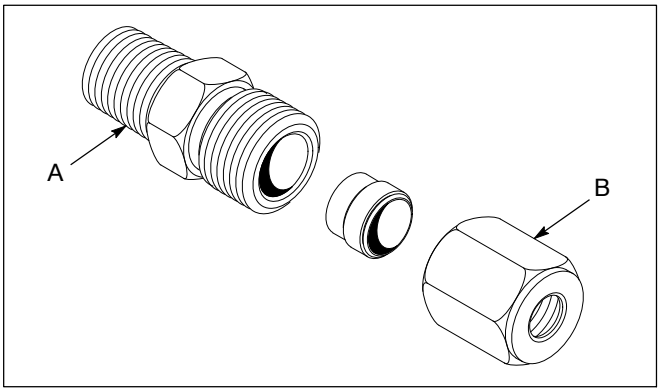

Part	Side A	Side B, -in. OD	Material
971250	$^{1}/_{4}$-in. NPT	$^{3}/_{8}$	Steel, zinc-plated

© 2013 Nordson Corporation
All rights reserved

High-Pressure Tube Fittings

Pipe-to-Tube Male Elbows

For use with seamless steel tube.

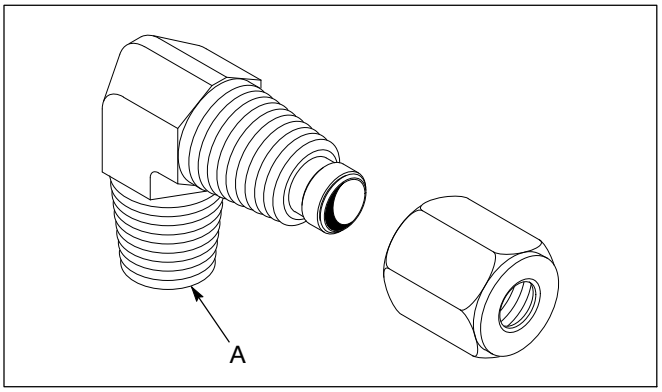

Part	Side A	Tubing B, in. OD	Material
971450	1/8-in. NPT	5/16	Brass
971500	3/8-in. NPT	3/8	Steel, zinc-plated
971501	1/4-in. NPT	3/8	Steel, zinc-plated

© 2013 Nordson Corporation
All rights reserved

Low-Pressure Pipe Fittings

Cross

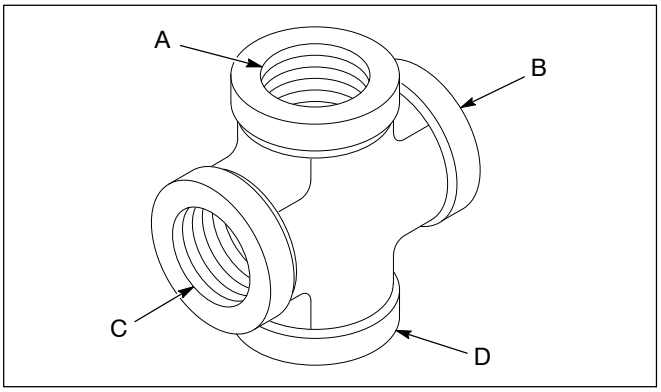

Part	Side A	Side B	Side C	Side D	Material
973974	1/4-in. NPT	1/4-in. NPT	1/4-in. NPT	1/4-in. NPT	Class 150 malleable iron, galvanized or zinc-plated
973969	3/4-in. NPT	3/4-in. NPT	3/4-in. NPT	3/4-in. NPT	Class 150 malleable iron, galvanized or zinc-plated
973970	3/4-in. NPT	1/2-in. NPT	1/2-in. NPT	3/4-in. NPT	316 stainless steel

Tees

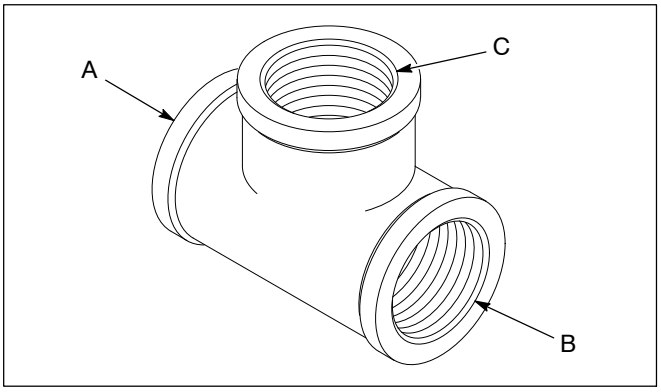

Part	Side A	Side B	Side C	Material
973261	1/4-in. NPT	1/4-in. NPT	1/4-in. NPT	Brass
973272	3/8-in. NPT	3/8-in. NPT	3/8-in. NPT	Class 150 malleable iron, galvanized
973280	1/2-in. NPT	3/8-in. NPT	1/2-in. NPT	Class 150 malleable iron, for reducing

© 2013 Nordson Corporation
All rights reserved

Low-Pressure Pipe Fittings

Elbows

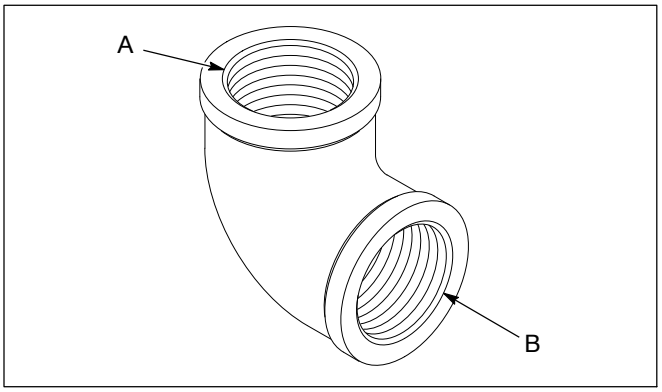

Part	Side A	Side B	Material
973152	1/4-in. NPT	1/4-in. NPT	Class 150 malleable iron, zinc-plated

Street Elbows

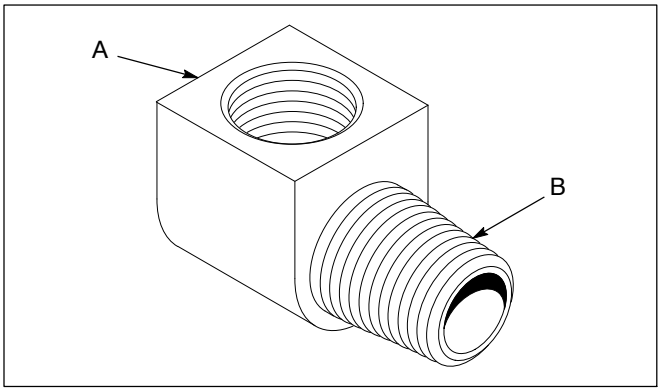

Part	Female A	Male B	Material
973125	1/8-in. NPT	1/8-in. NPT	Brass, zinc-plated
973156	1/4-in. NPT	1/8-in. NPT	Brass
973157	1/4-in. NPT	1/4-in. NPT	Brass

© 2013 Nordson Corporation
All rights reserved

Low-Pressure Pipe Fittings

Nipples

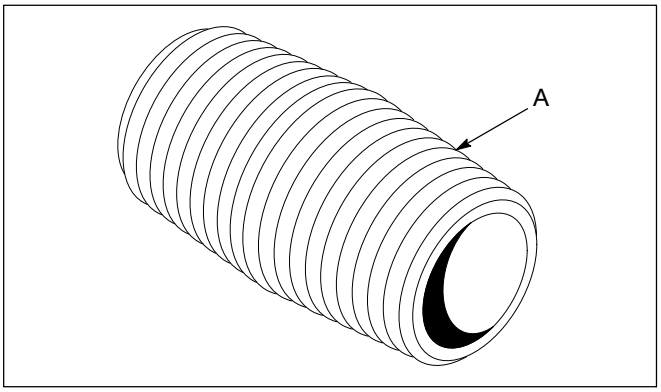

Part	Side A	Length, in.	Material
973039	1/8-in. NPT	3/4	Brass
973000	1/8-in. NPT	3/4	Steel, galvanized
973124	1/8-in. NPT	3/4	316 stainless steel
973002	1/8-in. NPT	1 1/2	Steel, galvanized
973085	1/4-in. NPT	7/8	Steel, galvanized
973117	1/4-in. NPT	1 1/2	Steel, galvanized
973032	1/4-in. NPT	2 1/2	Steel, galvanized
973027	1/4-in. NPT	7/8	Brass
973036	1/4-in. NPT	3	Brass
973618	3/8-in. NPT	1	316 stainless steel
973087	3/8-in. NPT	1 1/2	Steel, galvanized
973109	3/4-in. NPT	2	Steel, galvanized

© 2013 Nordson Corporation
All rights reserved

Low-Pressure Pipe Fittings

Bulkhead Fittings

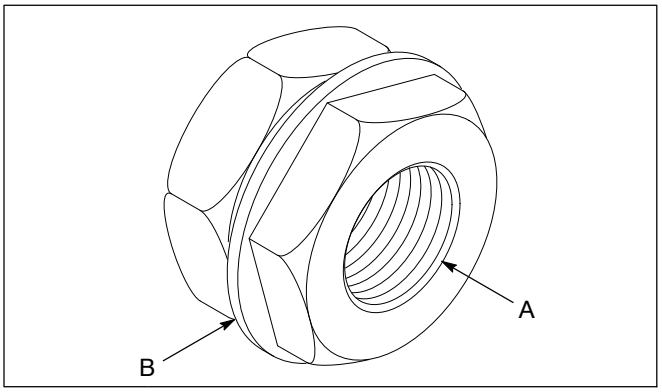

Part	Side A	Side B, in.	Material
973968	1/4-in. NPTF	3/4-16	Brass- or zinc-plated steel
973981	3/8-in. NPTF	1-14	Brass- or zinc-plated steel

Couplings

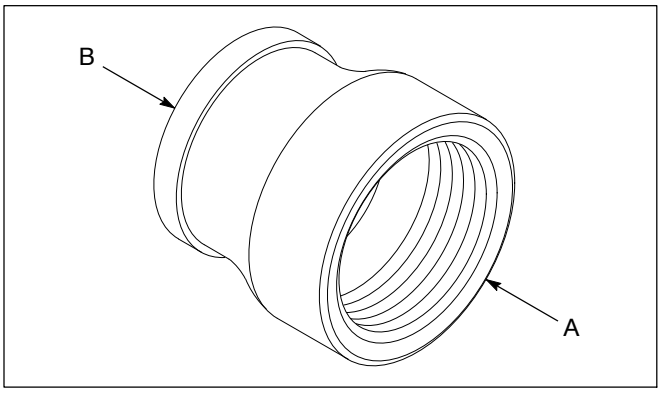

Part	Side A	Side B	Material
973313	1/4-in. NPT	1/8-in. NPT	Class 125 brass, for reducing
973503	1/8-in. GA	1/8-in. GA	Class 150 Galvanized

© 2013 Nordson Corporation
All rights reserved

Low-Pressure Hose Fittings

Female Connectors

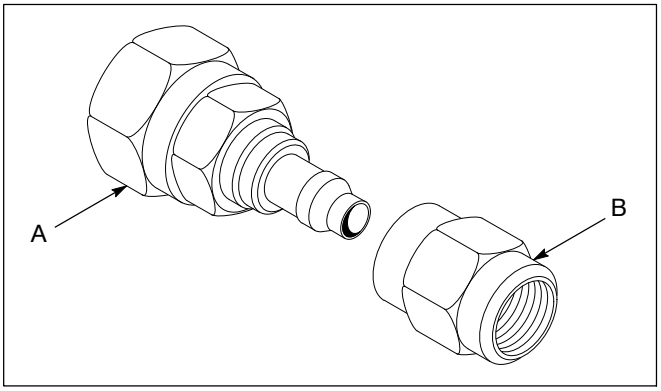

Part	Side A	Side B, in.	Material
971772	1/4-in. NPS	1/4 tube	Brass, nickel-plated, for 1/4-in. ID paint tube
971770	3/8-in. NPS	1/4 tube	Brass, nickel-plated, for 1/4-in. ID paint tube
971760	3/8-in. NPS	3/8 tube	Brass, nickel-plated, for 3/8-in. ID paint tube

Female Swivel Connectors

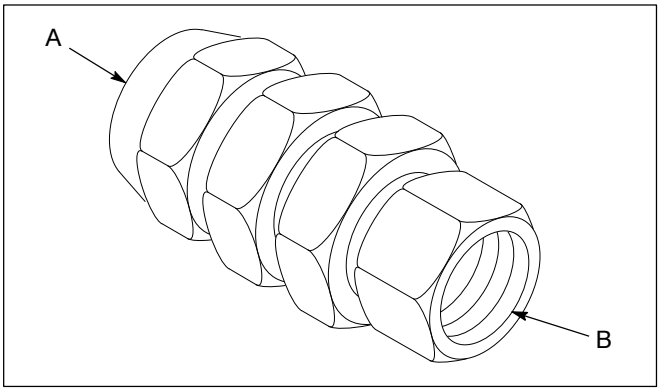

Part	Side A, -in. ID	Swivel B	Material
971763	1/4	1/4-in. NPSM	Brass, nickel- or zinc-plated
971764(1)	1/4	3/8-in. NPSM	Brass, nickel- or zinc-plated
971768	3/8	1/4-in. NPSM	Brass, nickel- or zinc-plated
971766	3/8	3/8-in. NPSM	Brass, nickel- or zinc-plated
971238	1/2	1/2-in. NPSM	Brass, nickel- or zinc-plated
971239	1/2	3/8-in. NPSM	Brass, nickel- or zinc-plated

(1) Reusable fitting that converts to Iso-Flo with Kinetix and Trilogy guns.

© 2013 Nordson Corporation
All rights reserved

Low-Pressure Hose Fittings

Pipe-to-Hose Male Adapters

For use with pipe-to-air/fluid hose.

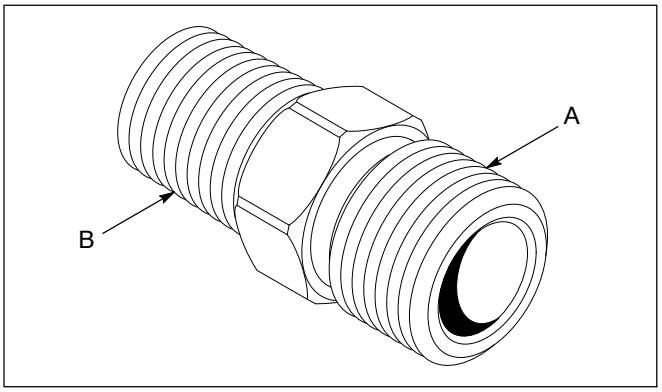

Part	Side A	Side B	Material
973209	3/8-in. NPS	1/8-in. NPT	316 stainless steel
972552	1/4-in. NPS	1/8-in. NPT	Brass
972553	3/8-in. NPS	1/4-in. NPT	Steel, zinc-plated
973208	3/8-in. NPS	1/4-in. NPT	316 stainless steel
972556	1/4-in. NPS	1/4-in. NPT	Brass cadmium-plated
972550	3/8-in. NPS	3/8-in. NPT	Steel, zinc-plated
973268	1/4-in. NPS	3/8-in. NPT	316 stainless steel
973207	3/8-in. NPS	3/8-in. NPT	316 stainless steel

© 2013 Nordson Corporation
All rights reserved

Low-Pressure Hose Fittings

Hose-to-Hose Adapters

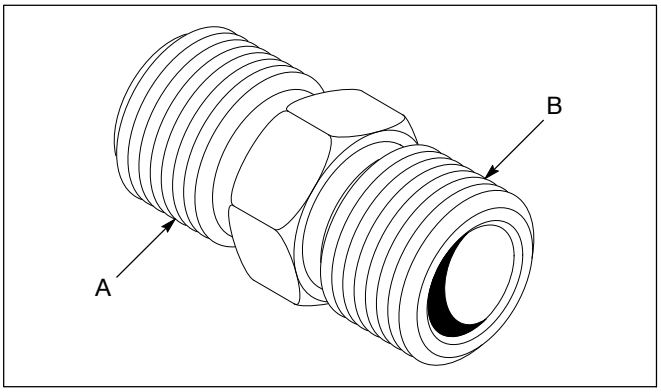

Part	Side A	Side B	Material
973505	$^1/_4$-in. NPS	$^1/_4$-in. NPS	Brass
972637	$^3/_8$-in. NPS	$^3/_8$-in. NPS	Brass

© 2013 Nordson Corporation
All rights reserved

Low-Pressure Hose Fittings

Quick Disconnect Air

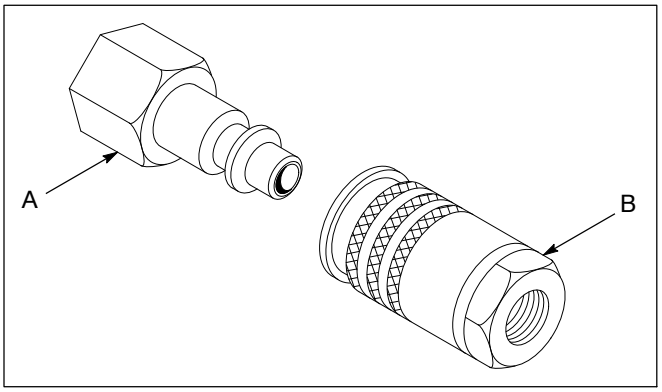

Part	Sides A and B	Material
972594	$^1/_4$-in. NPT	Steel, female half (side B)

© 2013 Nordson Corporation
All rights reserved

Low-Pressure Tube Fittings

Pipe-to-Tube Male Elbows with Ferrule

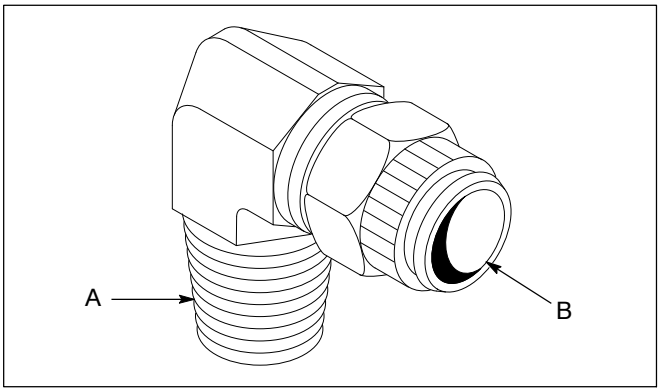

Part	Pipe A	Tubing B, -in. OD	Material
971403	1/8-in. NPTF	1/4	Brass, with plastic ferrule
971407	1/8-in. NPTF	1/4	All plastic
971508	1/8-in. NPTF	3/8	Brass, with plastic ferrule
971406	1/4-in. NPTF	1/4	Brass, with plastic ferrule
971506	1/4-in. NPTF	3/8	Brass, with plastic ferrule

Tube-to-Tube Connectors with Ferrule

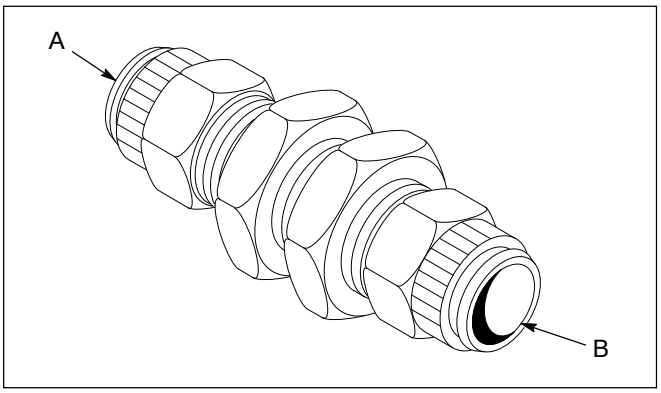

Part	Tubing A, -in. OD	Tubing B, -in. OD	Material
971618	1/4	1/4	Brass, with ferrule

© 2013 Nordson Corporation
All rights reserved

Low-Pressure Tube Fittings

Nut with Ferrule

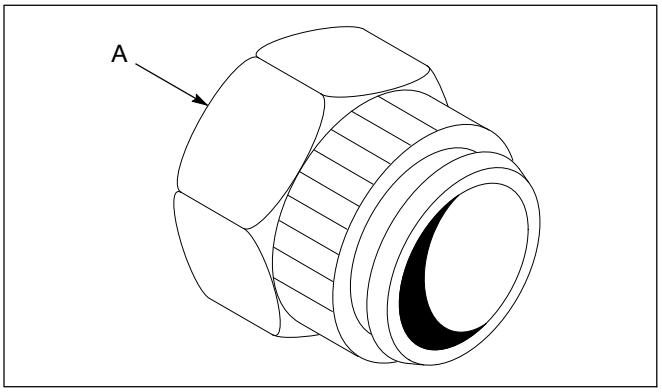

Part	Side A, -in. OD	Material
972579	1/4	Brass, with plastic ferrule

Pipe-to-Tube Connectors with Ferrule

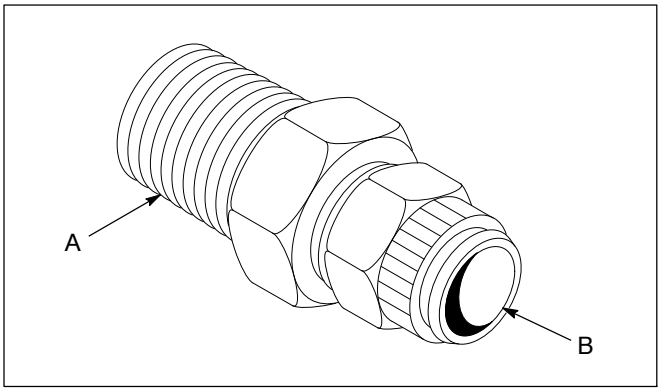

Part	Pipe A	Tubing B, -in. OD	Material
971154	1/8-in. NPTF	1/4	Brass, with plastic ferrule
971260	1/8-in. NPTF	3/8	Brass, with plastic ferrule
971155	1/4-in. NPTF	1/4	Brass, with plastic ferrule
971258	1/4-in. NPTF	3/8	Brass, with plastic ferrule
971156	3/8-in. NPTF	1/4	Brass, with plastic ferrule

© 2013 Nordson Corporation
All rights reserved

Low-Pressure Tube Fittings

Tube-to-Pipe or Tube-to-Tube Tees with Ferrule

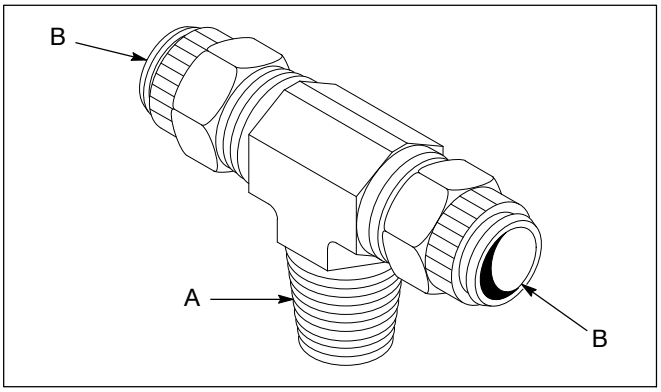

Part	Side A	Tubing B, -in. OD	Material
971616	$^1/_8$-in. NPTF (pipe)	$^1/_4$	Brass, with plastic ferrule
971628	$^1/_4$-in. tube	$^1/_4$	Brass, with plastic ferrule

Female Pipe-to-Tube Connector with Ferrule

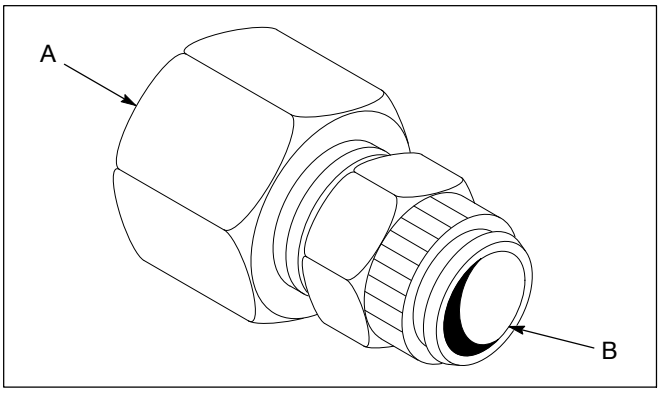

Part	Side A	Tubing B, -in. OD	Material
971612	$^1/_8$-in. NPTF	$^1/_4$	Brass, with plastic ferrule

© 2013 Nordson Corporation
All rights reserved

© 2013 Nordson Corporation
All rights reserved

Low-Pressure Air Fittings for Plastic Tube

Union Y

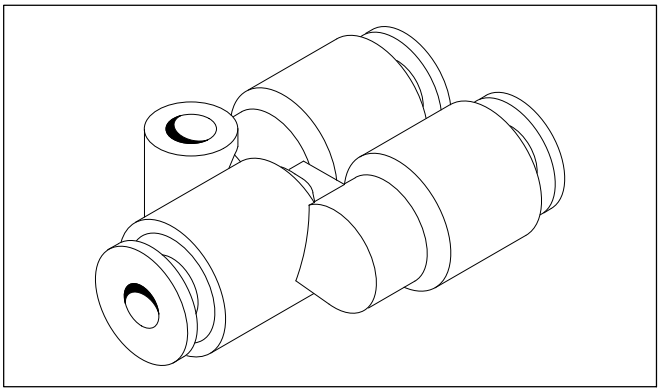

Part	Tube Size, -in. OD	Material
972672	1/4	Plastic and brass, for tube-to-tube union

Union Tees

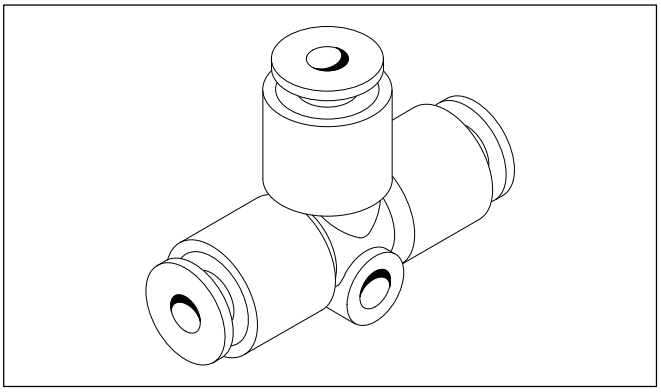

Part	Tube Size, -in. OD	Material
972671	1/4	Plastic and brass, for tube-to-tube union
972494	3/8	Plastic and brass, for tube-to-tube union

© 2013 Nordson Corporation
All rights reserved

Low-Pressure Air Fittings for Plastic Tube

Branch Tees

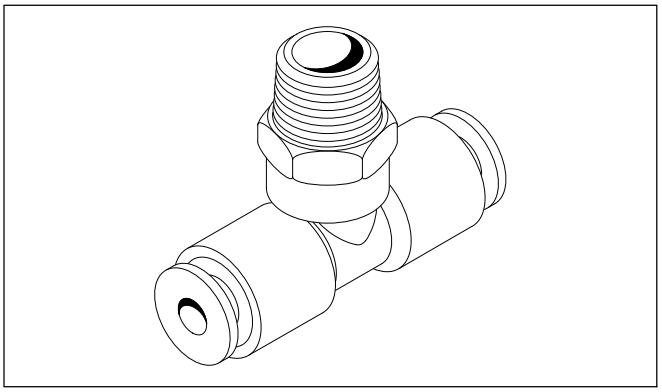

Part	Tube Size, -in. OD	Fitting Size	Material
973615	1/4	1/8-in. NPT	Plastic
971268	1/4	1/4-in. NPT	Plastic
971522	1/2	3/8-in. NPT	Plastic

Bulkhead Connector

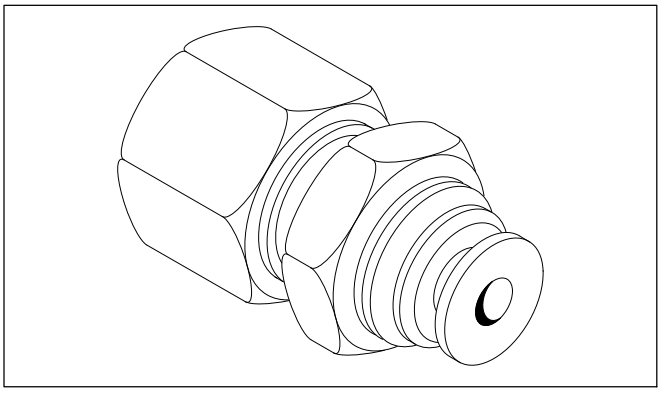

Part	Tube Size, -in. OD	Fitting Size	Material
972725	1/4	1/4-in. NPT	Plastic and brass

© 2013 Nordson Corporation
All rights reserved

Low-Pressure Air Fittings for Plastic Tube

Bulkhead Unions

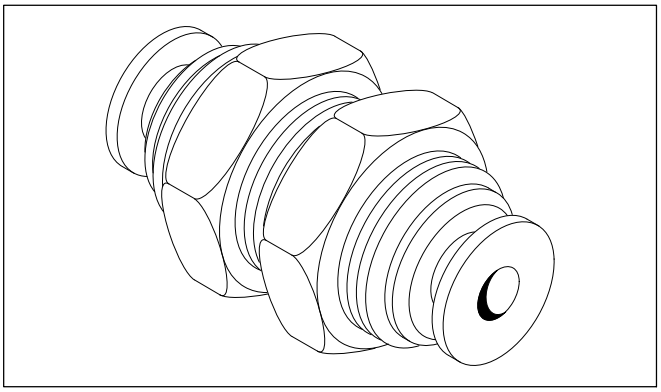

Part	Tube Size, -in. OD	Material
973986	1/4	Plastic and brass
973987	3/8	Plastic and brass

Male Run Tees

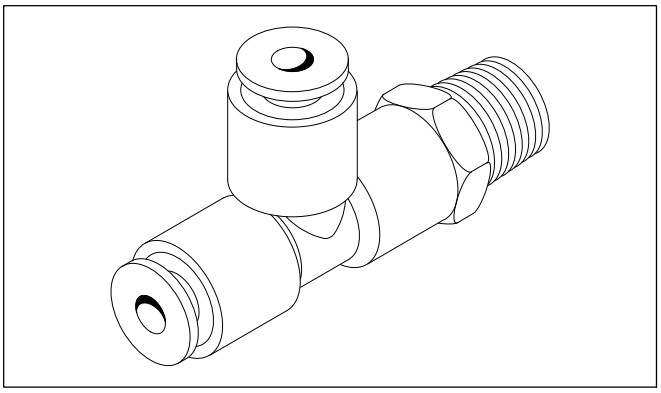

Part	Tube Size, -in. OD	Fitting Size	Material
971267	1/4	1/4-in. NPT	Plastic and brass

© 2013 Nordson Corporation
All rights reserved

Low-Pressure Air Fittings for Plastic Tube

Male Elbows

Push-on fitting.

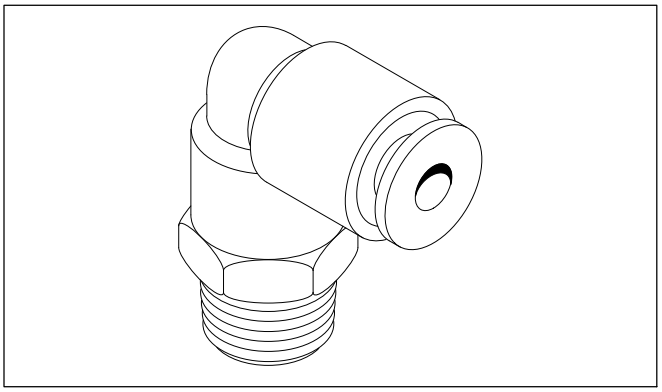

Part	Tube Size, -in. OD	Fitting Size	Material
972119	1/4	1/8-in. NPT	Plastic and brass
971266	1/4	1/4-in. NPT	Plastic and brass
972216	1/4	3/8-in. NPT	Plastic and brass
972858	3/8	1/8-in. NPT	Plastic and brass
972183	3/8	1/4-in. NPT	Plastic and brass
972194	3/8	3/8-in. NPT	Plastic and brass
972192	1/2	1/4-in. NPT	Plastic and brass
972122	1/2	3/8-in. NPT	Plastic and brass

© 2013 Nordson Corporation
All rights reserved

Low-Pressure Air Fittings for Plastic Tube

Male Connectors

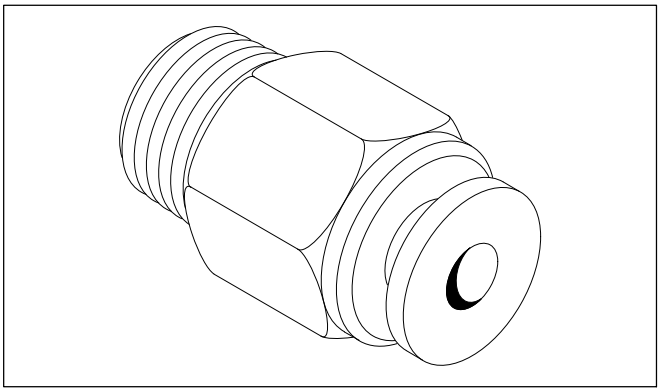

Part	Tube Size, -in. OD	Fitting Size	Material
972716	1/4	1/8-in. NPT	Plastic and brass
971265	1/4	1/4-in. NPT	Plastic and brass
971672	1/4	3/8-in. NPT	Plastic and brass
971175	3/8	1/8-in. NPT	Plastic and brass
971177	3/8	1/4-in. NPT	Plastic and brass
971176	3/8	3/8-in. NPT	Plastic and brass
971178	3/8	1/2-in. NPT	Plastic and brass
971299	1/2	1/4-in. NPT	Plastic and brass
971659	1/2	3/8-in. NPT	Plastic and brass
971660	1/2	1/2-in. NPT	Plastic and brass

© 2013 Nordson Corporation
All rights reserved

© 2013 Nordson Corporation
All rights reserved

Straight Male Connectors

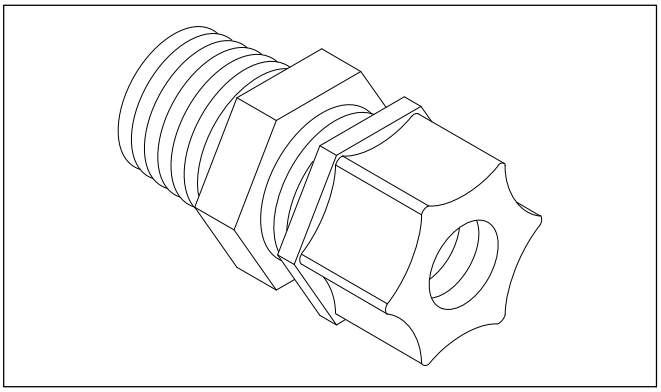

Part	Tube Size, -in. OD	Fitting Size	Material
972228(1)	1/4	1/4-in. NPT	Nylon
144549(1)	3/8	1/4-in. NPT	Nylon
972230(1)	1/4	3/8-in. NPT	Nylon
972231(1)	3/8	3/8-in. NPT	Nylon
971159(2)	1/4	1/8-in. NPT	Nylon
971235(2)	1/4	1/8-in. NPT	Delrin
971296(2)	1/4	1/4-in. NPT	Nylon
971232(2)	1/4	1/4-in. NPT	Delrin
971310(2)	1/4	3/8-in. NPT	Nylon
971257(2)	3/8	1/4-in. NPT	Nylon
971626(2)	3/8	3/8-in. NPT	Nylon
971302(2)	1/2	3/8-in. NPT	Nylon

(1) Includes ferrule nut with gripper.

(2) Includes one piece nut.

© 2013 Nordson Corporation
All rights reserved

Low-Pressure Plastic Fittings

Tube Nuts with Ferrule

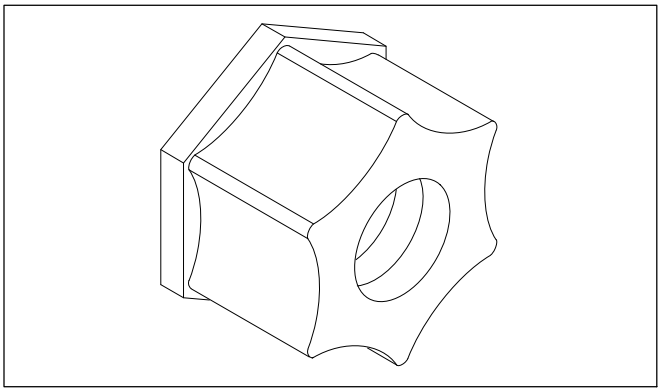

Part	Thread A, -in. OD	Material
971294	$^{1}/_{4}$	Nylon
972602	$^{3}/_{8}$	Nylon

© 2013 Nordson Corporation
All rights reserved

Low-Pressure Plastic Fittings

Male Elbows

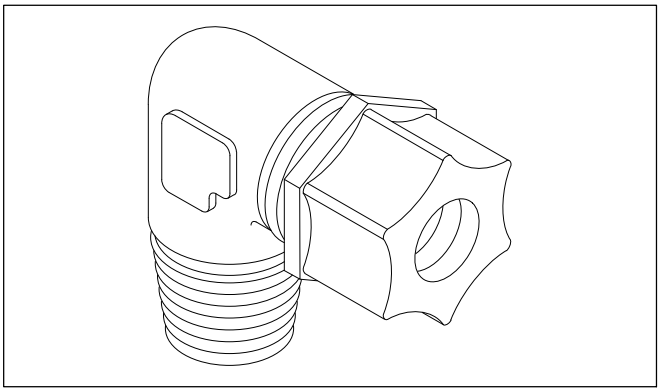

Part	Tube Size, -in. OD	Fitting Size	Material
972201(1)	1/4	1/4-in. NPT	Nylon
972225(1)	3/8	1/4-in. NPT	Nylon
972226(1)	1/4	3/8-in. NPT	Nylon
972227(1)	3/8	3/8-in. NPT	Nylon
971407(2)	1/4	1/8-in. NPT	Nylon
971234(2)	1/4	1/8-in. NPT	Delrin
971411(2)	1/4	1/4-in. NPT	Nylon
971233(2)	1/4	1/4-in. NPT	Delrin
971309(2)	3/8	1/4-in. NPT	Delrin

(1) Includes ferrule nut with gripper.

(2) Includes one piece nut.

© 2013 Nordson Corporation
All rights reserved

Low-Pressure Plastic Fittings

Male Branch Tees with Nuts

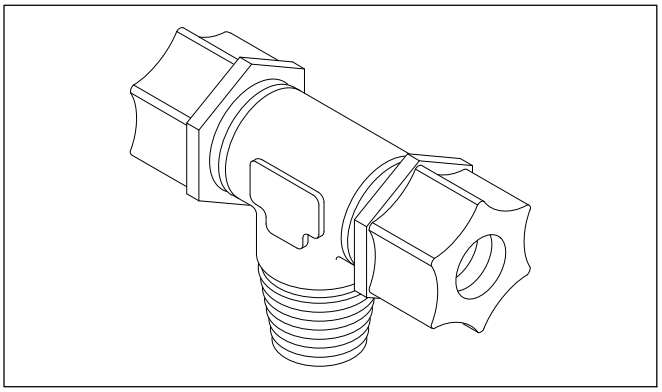

Part	Tube Size, -in. OD	Fitting Size	Material
971236	$^1/_4$	$^1/_8$-in. NPT	Delrin

© 2013 Nordson Corporation
All rights reserved

Low-Pressure Plastic Fittings

Grooving Tools for Low-Pressure Plastic Fittings

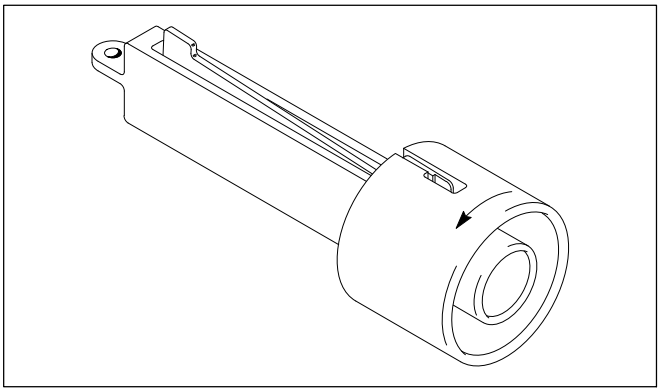

Part	Size, -in. OD
248649	$^{3}/_{8}$
248648	$^{1}/_{4}$

© 2013 Nordson Corporation
All rights reserved

Low-Pressure Plastic Fittings

Elbows

Part	Thread A	Thread B	Feature
971 627	$^{3}/_{8}$ NPT	$^{3}/_{16}$ ID tube special PTFE	Heavy wall with nut
971 407	$^{1}/_{8}$ NPT	$^{1}/_{4}$ ID tube	Used on air line plastic regulator and dump valve
971 507	$^{1}/_{4}$ NPT	$^{3}/_{16}$ ID tube special PTFE	Heavy wall; used on AN-9 and dump valve

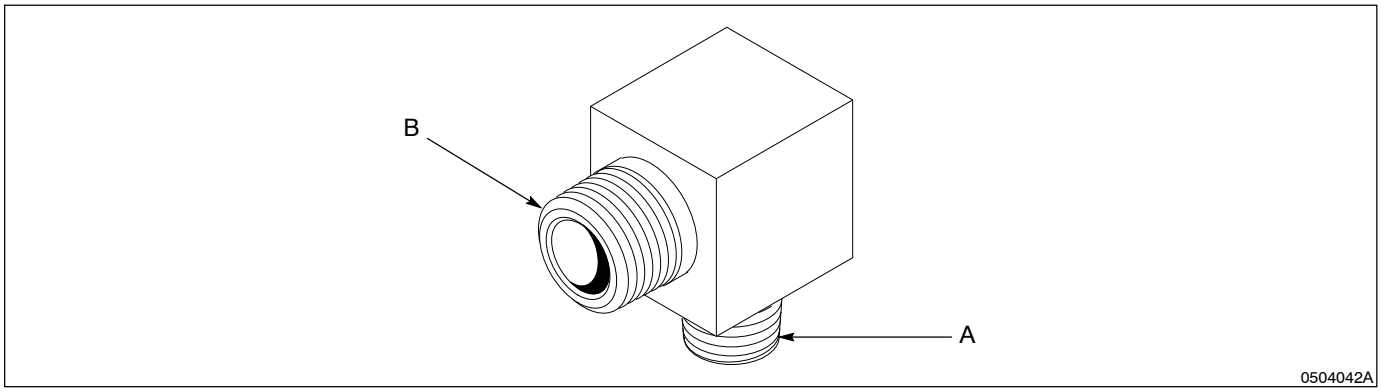

© 2013 Nordson Corporation
All rights reserved

Low Pressure PTFE Fittings for Kinetix and Trilogy Guns

Elbows

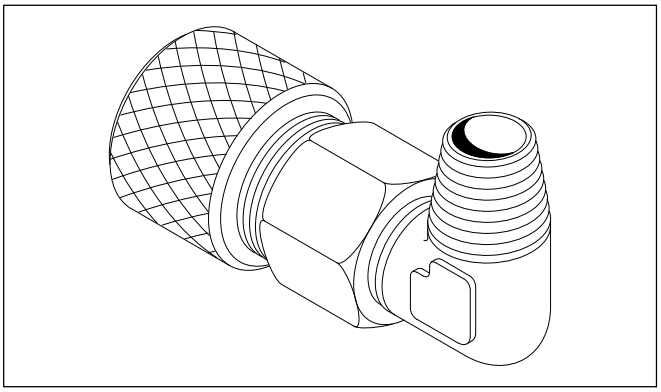

Part	ID, in.	OD, in.	Description
248230	$^{3}/_{16}$	$^{3}/_{8}$	Tube-to-$^{1}/_{4}$-in. NPT pipe
248231	$^{3}/_{8}$	$^{9}/_{16}$	Tube-to-$^{3}/_{8}$-in. NPT pipe

Bushing

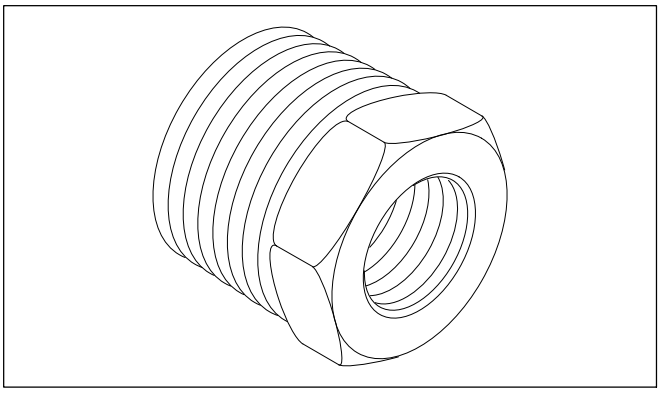

Part	Description
973306	$^{3}/_{8}$-in. NPT x $^{1}/_{4}$-in. NPT

© 2013 Nordson Corporation
All rights reserved

Low Pressure PTFE Fittings for Kinetix and Trilogy Guns

Straight

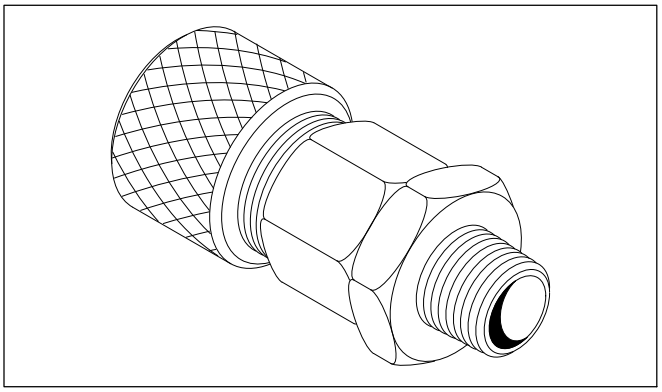

Part	ID, in.	OD, in.	Description
248234	$^{3}/_{8}$	$^{9}/_{16}$	Tube-to-$^{3}/_{8}$-in. NPT

© 2013 Nordson Corporation
All rights reserved

Kinetix and Trilogy Hoses and Fittings

Air Hoses

Part	Description
Manual Air Spray, HVLP, AAA, and Watermark	
1074130	Grounded air hose, 30 ft, $^3/_8$-in. ID, w/fittings
1074131	Grounded air hose, 50 ft, $^3/_8$-in. ID, w/fittings
1074132	Grounded air hose, 100 ft, $^3/_8$-in. ID, w/fittings

Fluid Hoses and Accessories for Manual Spray Guns (Kit Part Numbers)

Part (Standard)	Part (Optional)	Description	Gun Type
336357		Standard hose, 8 ft, 0.250-in. ID, low pressure	Manual HVLP or air spray 100 psi maximum pressure
	336359	Optional hose, 25 ft, 0.250-in. ID, low pressure	
	336470	Optional hose-to-hose coupling, $^3/_8$-in. NPS x $^3/_8$-in. NPS, low pressure	
	336460	Optional quick disconnect tube and ferrule kit, low pressure	
336460		Optional quick disconnect tube and ferrule kit, low pressure	Manual HVLP or air spray 100 psi maximum pressure
	336495	Optional quick disconnect connector, $^3/_8$-in. NPS	
	336496	Optional circulation restrictor, $^3/_8$-in. NPS	
	336497	Optional swivel stem, $^3/_8$-in. NPS	
336722		Standard hose, 25 ft, 0.250-in. ID with ground strap, low pressure	Manual waterborne 100 psi maximum pressure
336337		Standard hose, 1 ft, 0.250-in. ID, high pressure	Manual air-assisted or airless 1500 psi maximum pressure
NOTE: Standard hoses are shipped with spray gun.			

© 2013 Nordson Corporation
All rights reserved

Kinetix and Trilogy Hoses and Fittings

Fluid Hoses and Accessories for Automatic Spray Guns (Kit Part Numbers)

Part (Standard)	Part (Optional)	Description	Gun Type
336689		Standard ferrule kit, to be used with 0.250-in. OD tubing	Automatic KVLP or air spray 100 psi maximum pressure
336688		Standard ferrule kit, to be used with 0.375-in. OD tubing	
	*900589	Optional hose, 0.25-in. OD x 0.093-in. ID PTFE tubing	
	*900561	Optional hose, 0.375-in. OD x 0.188-in. ID PTFE tubing	
	*146132	Optional hose, 0.375-in. OD x 0.250-in. ID PTFE tubing	
	336659	Optional hose, 25 ft, 0.250-in. ID, low pressure	
	336470	Optional hose-to-hose coupling, $^3/_8$-in. NPS x $^3/_8$-in. NPS, low pressure	
336629		Standard hose, 1.5 ft, 0.250-in. ID, high pressure	Automatic air-assisted or airless 1500 psi maximum pressure
	336628	Optional hose, 25 ft, 0.250-in. ID, high pressure	
336723		Standard hose, 25 ft, 0.250-in. ID, low pressure	Automatic 100 psi waterborne
NOTES: Standard hoses are shipped with spray gun. *Sold in one-foot increments. Requires a ferrule kit.			

Air Tubing Option for Automatic Low-Pressure Spray Gun

Part	Description
900557	Nylon tubing, air, 0.375-in. OD x 0.275-in. ID
900556	Nylon tubing, air, 0.250-in. OD x 0.180-in. ID
NOTE: Spray gun comes with push-fit air fitting included.	

© 2013 Nordson Corporation
All rights reserved

Prism Fluid Hoses and Fittings

Black Rubber Hose

Nylon lining, black neoprene cover, 14 bar (200 psi) maximum pressure.

Hose			Fittings	
Part	**ID, in.**	**OD, in.**	**Part**	**Size (in. NPSM)**
900552	1/4	1/2	971764	1/4 x 3/8
900554	3/8	11/16	971766	3/8 x 3/8
NOTE: Hose parts, 900554 and fitting parts, 971767 and 971766 will not work with a circulating gun.				

Nylon Single Layer Hose

Semi-transparent, 14 bar (200 psi) maximum pressure.

Hose			Fittings	
Part	**ID, in.**	**Wall, in.**	**Part**	**Size (in. NPSM)**
900531	1/4	0.050	971770	1/4 x 3/8
900520	3/8	0.062	971760	3/8 x 3/8

Air Hose

Air hoses are optional and must be ordered separately. You must use a grounded air hose with the Prism HVLP and air spray manual guns.

Part	ID, in.	Description
1074130	3/8	Air hose with fittings, 8 meter

© 2013 Nordson Corporation
All rights reserved

Prism Fluid Hoses and Fittings

Air Tubing

Air tubing is optional and must be ordered separately. You must use this tubing with the Prism low pressure automatic gun. Order all tubing in 1 foot increments.

Part	Description
900509	Air tubing, polyethylene, 0.250 x 0.040 in.
900511	Air tubing, polyethylene, 0.375 x 0.062 in.
900556	Air tubing, nylon, 0.250 x 0.035 in.
900557	Air tubing, nylon, 0.375 x 0.050 in.

© 2013 Nordson Corporation
All rights reserved

Section 10
Iso-Flo Waterborne Systems

General Information 10-1
Description 10-1

Watermark Iso-Flo HD Manual Voltage Block System 10-3
Description 10-3
Features 10-3
Specifications 10-4
Ordering Information 10-4

Watermark Iso-Flo HD Automatic Voltage Block System 10-5
Description 10-5
Features 10-5
Specifications 10-6
Ordering Information 10-6

Iso-Batch Cabinet 10-7
Description 10-7
Specifications 10-7
Ordering Information 10-7

© 2013 Nordson Corporation
All rights reserved

Table of Contents

© 2013 Nordson Corporation
All rights reserved

General Information

Description

The Nordson Iso-Flo HD voltage block system is part of the Watermark family of spray equipment. The Iso-Flo HD voltage block system allows coating material to flow to the spray device but blocks the electrostatic charge from leaking through the coating material lines to ground. It allows only a small amount of coating material and equipment to be charged. When the cabinet door is opened, the interlock switch and grounding strap safely ground-out the system. The Iso-Flo HD voltage block system is installed between the grounded coating material supply source and the spray device, ensuring a continuous flow of electrostatically-charged material.

The Iso-Flo HD voltage block system does not require the use of electricity or external controls. It is powered by clean, dry, compressed plant air and operates automatically in response to spray device triggering. The system has few wear parts and requires only minimal maintenance. The Iso-Flo HD voltage block system can be easily retrofitted to virtually all internal or external power supply spray devices suitable for waterborne coatings.

The system is available in two versions: the Iso-Flo HD manual voltage block system, for use with one manual spray device, and the Iso-Flo HD automatic voltage block system, for use with numerous automatic spray devices.

For more information, talk to your Nordson representative or contact:

Nordson Corporation
Liquid Systems Group
555 Jackson Street
Amherst, Oh 44001
Phone: (800) 433-9319
Fax: (888) 229-4580

© 2013 Nordson Corporation
All rights reserved

© 2013 Nordson Corporation
All rights reserved

Watermark Iso-Flo HD Manual Voltage Block System

Description

Use the Nordson Iso-Flo HD manual voltage block system with electrostatic waterborne coating systems equipped with low-pressure spray devices. The Iso-Flo HD manual voltage block system delivers pressurized coating material on demand without the use of electricity or external controls.

Features

- Use with manual low-pressure air spray device
- For parts or series of parts requiring no more than 1.18 l (40 oz) of coating material before pausing to fill
- Coating material is delivered at 0.59 l (20 oz) per min at 4.1 bar (60 psi), 20 seconds on a Zahn #2 cup, ambient temperature
- Arc suppression device
- Wall- or dolly-mount
- Stainless steel components
- Two door interlocks

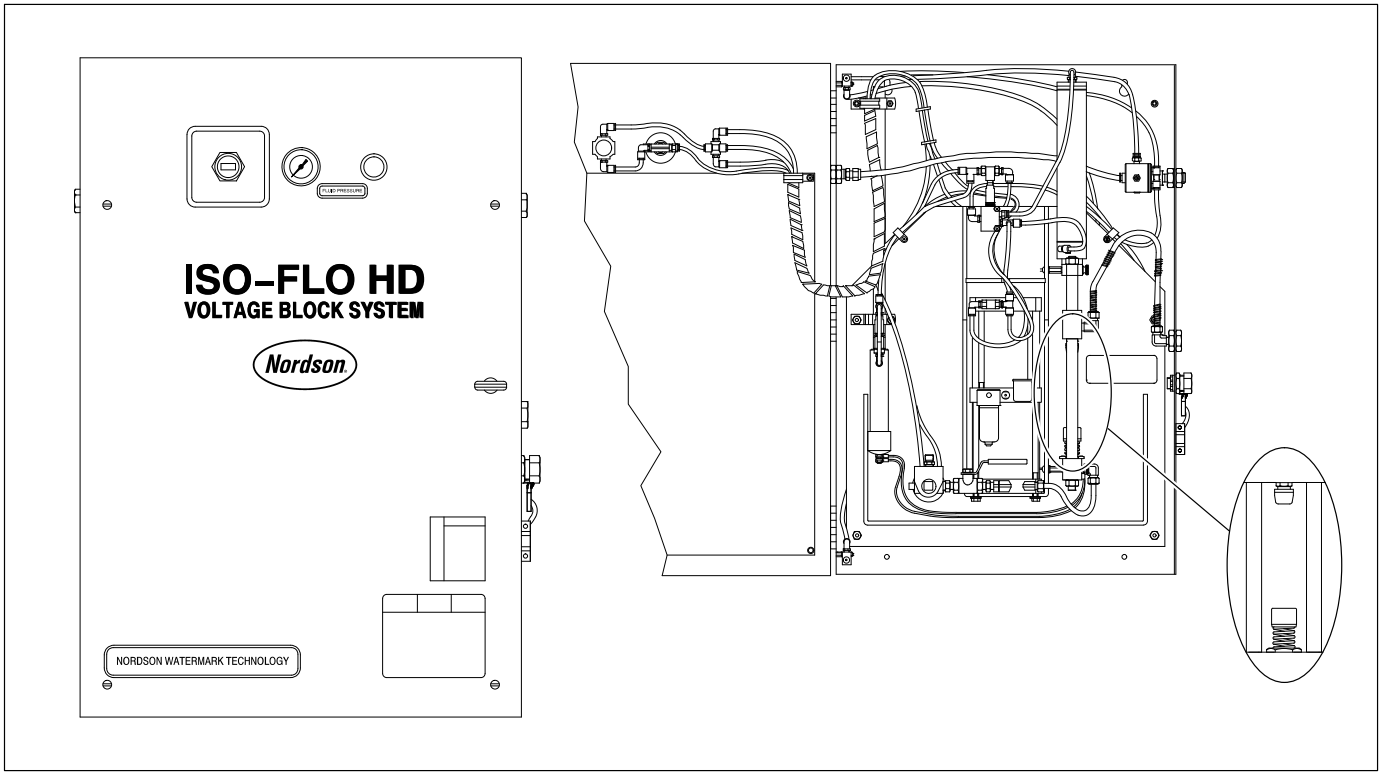

© 2013 Nordson Corporation
All rights reserved

Watermark Iso-Flo HD Manual Voltage Block System

Specifications

Dimensions, cm (in.)	
Height	91.4 (36)
Width	60.9 (24)
Depth	21.9 (9)

Ordering Information

Part	Description
	Iso-Flo HD Manual Voltage Block System
225579	Iso-Flo, HD manual voltage block system
	Cables
297979	Cable, HD, electrostatic, 2 m
297980	Cable, HD, electrostatic, 8 m
	Kits
139401	Repair, coupling, male and female
223723	Repair, HD pump
295113	Air flow switch
	Pump
236615	Pump, heavy duty
	Power Supply
229934	EPS6, 120 or 240 Vac
229941	EPS6, 100 or 200 Vac

© 2013 Nordson Corporation
All rights reserved

Watermark Iso-Flo HD Automatic Voltage Block System

Description

Use the Nordson Iso-Flo HD automatic voltage block system with electrostatic waterborne coating systems equipped with low-pressure spray devices. The Iso-Flo HD automatic system delivers pressurized coating material on demand without the use of electricity or external controls.

Features

- Use with up to six automatic low-pressure spray devices
- Coating material is delivered at 1.77 l (60 oz) per min at 4.1 bar (60 psi), 20 seconds on a Zahn #2 cup, ambient temperature
- For continuous operation of coating material—no pauses required to fill
- Stainless steel components
- Wall-mount

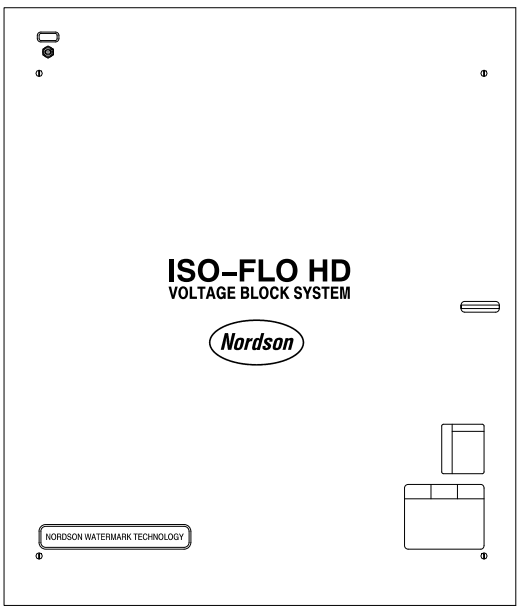

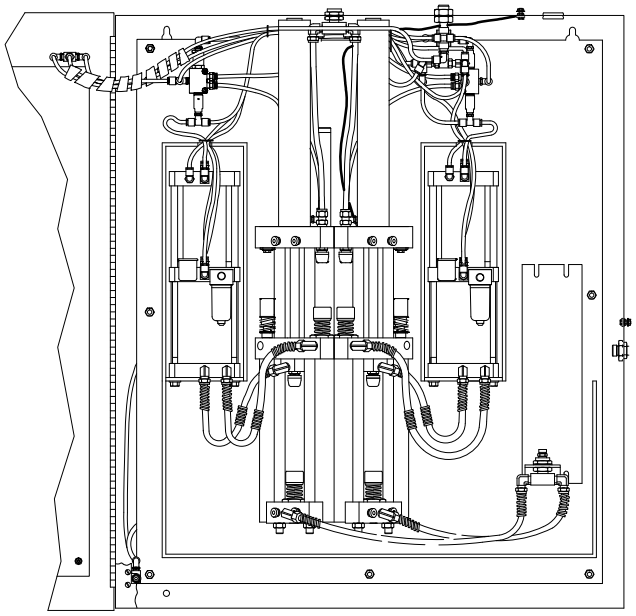

© 2013 Nordson Corporation
All rights reserved

Watermark Iso-Flo HD Automatic Voltage Block System

Specifications

Dimensions, cm (in.)	
Height	106.7 (42)
Width	91.4 (36)
Depth	21.9 (9)

Ordering Information

Part	Description
	Iso-Flo HD Automatic Voltage Block System
224245	Iso-Flo HD automatic voltage block system
	Cables
297979	Cable, HD, electrostatic, 2 m
297980	Cable, HD, electrostatic, 8 m
	Kits
139401	Kit, repair, coupling, male and female
223723	Kit, repair, HD pump
107806	Air pressure switch
	Pump
222977	Pump, heavy duty
	Power Supply
229934	EPS6, 120 or 240 Vac
229941	EPS6, 100 or 200 Vac

© 2013 Nordson Corporation
All rights reserved

Iso-Batch Cabinet

Description

The Nordson Iso-Batch cabinet is an alternative to the Iso-Flo product. Although the Iso-Flo HD manual and automatic systems are suitable for use with a wide variety of waterborne materials, there are occasional exceptions when customers may prefer to use pressure pots. These exceptions include

- materials that are sheer-sensitive
- applications requiring low material usage
- applications requiring numerous color changes

The Iso-Batch cabinet accommodates a maximum pressure pot size of 48-cm (19-in.) diameter and 76-cm (30-in.) high including an air-driven agitator. The cabinet should be used with high-dielectric strength PTFE hoses and an EPS6 electrostatic power supply. The cabinet also includes a grounding bracket which grounds the system when the cabinet doors are opened.

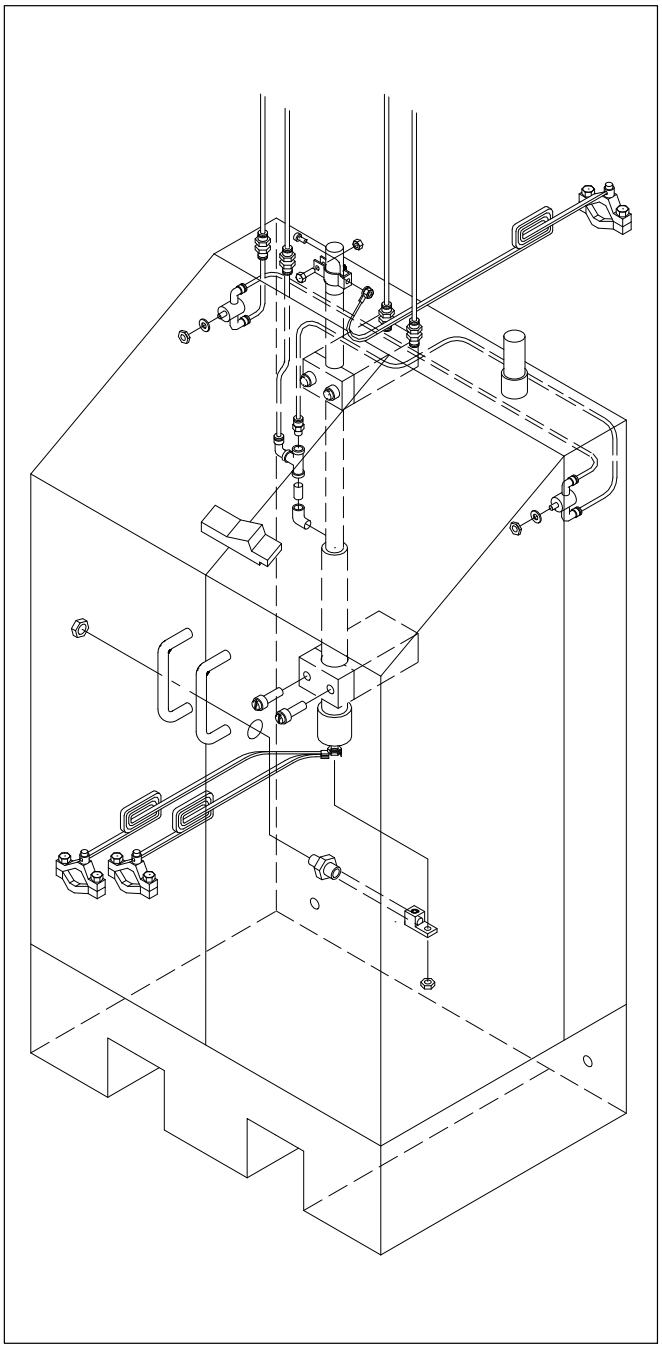

Specifications

Dimensions, cm (in.)	
Height	152 (60)
Width	81 (32)
Depth	61 (24)
Pressure Pot Size, cm (in)	
Maximum diameter	48 (19)
Maximum height	76 (30)

Ordering Information

Part	Description
328238	Iso-Batch cabinet
	Power Supplies
229934	EPS6, 120 or 240 Vac
229941	EPS6, 100 or 200 Vac
	Cables
297979	Cable, HD, electrostatic, 2 m
297980	Cable, HD, electrostatic, 8 m

© 2013 Nordson Corporation
All rights reserved

© 2013 Nordson Corporation
All rights reserved

Section 11
Common Accessories

Pressure Gauges and Regulators 11-1
Air Pressure Gauges 11-1
Panel-Mounted Air Pressure Gauges 11-1
Fluid Pressure Gauges 11-1
Air Pressure Regulators 11-2

Pump Solvent Chamber Fluids, Oils, Grease, and Lubricants . . . 11-3
Pump Solvent Chamber Fluid 11-3
Vitalizer Oil, and Dielectric Grease 11-3
Lubricants 11-3

Tools, Tubing, and Equipment Covers 11-5
Gun Wrenches 11-5
Kinetix Removal Tools (KVLP/Air Spray Only, Manual and Automatic) 11-5
Nozzle Cleaning Tools 11-5
Tubing 11-5
Equipment Covers 11-6

Measuring Instruments 11-7
Non-Loading kV Meter Kit 11-7
Wet Film Gauges 11-7
Dry Film Gauges 11-7

Miscellaneous 11-9

© 2013 Nordson Corporation
All rights reserved

Table of Contents

© 2013 Nordson Corporation
All rights reserved

Pressure Gauges and Regulators

Air Pressure Gauges

Part	Description	Note
901229	2-in. dia air pressure gauge, $^1/_4$-in. NPT center back connection 0–7 bar (0–100 psig)	
901237	$1^1/_2$-in. dia air pressure gauge, $^1/_8$-in. NPT center back connection, 0–7 bar (0–100 psig)	
901264	$2^1/_2$-in. dia air pressure gauge, $^1/_4$-in. NPT bottom connection, 0–7 bar (0–100 psig)	
901236	$2^1/_2$-in. dia air pressure gauge, $^1/_4$-in. NPT center back connection, 0–7 bar (0–100 psig)	

Panel-Mounted Air Pressure Gauges

Part	Description
172766	2-in. dia panel-mounted air pressure gauge, $^1/_8$-in. NPT center back connection, 0–7 bar (0–100 psig)
172767	2-in. dia panel-mounted air pressure gauge, $^1/_8$-in. NPT center back connection, 0–2 bar (0–30 psig)

Fluid Pressure Gauges

Part	Description
153718	$2^1/_2$-in. dia fluid pressure gauge, $^1/_4$-in. NPT bottom connection, 0–138 bar (0–2000 psig)
901265	$2^1/_2$-in. dia fluid pressure gauge, $^1/_4$-in. NPT lower back connection, 0–138 bar (0–2000 psig)
901241	2-in. fluid pressure gauge, with diaphragm and damper, $^1/_4$-in. NPT bottom connection, 0–11 bar (0–160 psig)
115135	$2^1/_2$-in. dia fluid pressure gauge, $^1/_4$-in. NPT center back connection, 0–138 bar (0–2000 psig)

© 2013 Nordson Corporation
All rights reserved

Pressure Gauges and Regulators

Air Pressure Regulators

Part	Description
901479	Air pressure regulator, $^{3}/_{8}$-in. NPT inlet and outlet ports, $^{1}/_{4}$-in. NPT gauge ports, 0–9 bar (0–125 psig)
172764	Control panel air pressure regulator, $^{3}/_{8}$-in. NPT inlet and outlet ports, $^{1}/_{4}$-in. NPT gauge ports, 0.34–9 bar (5–125 psig)
172765	Control panel air pressure regulator, $^{1}/_{4}$-in. NPT inlet and outlet ports, $^{1}/_{4}$-in. NPT gauge ports, 0–2 bar (0–30 psig)
901478	Iso-Flo miniature regulator, $^{1}/_{8}$-in. NPT ports, 0–9 bar (0–125 psig)

© 2013 Nordson Corporation
All rights reserved

Pump Solvent Chamber Fluids, Oils, Grease, and Lubricants

Pump Solvent Chamber Fluid

NOTE: These fluids are used as lubricants in pump hydraulics sections.

Part	Description
900255	Type-K, one qt
244854	Type-Q, 2.3 oz concentrate (makes one gal)
248831	Type-S, one qt
140029	Type-T, one qt

Vitalizer Oil, and Dielectric Grease

Part	Description
900214	Oil, vitalizer, one pt
900215	Oil, vitalizer, one qt
900216	Oil, vitalizer, one gal
900217	Oil, vitalizer, five gal
247532	Dielectric grease, 3-cc applicator
245733	Dielectric grease, 3-cc applicators, package of 12
247658	Dielectric grease, 10-cc applicators, package of 12
247639	Dielectric grease, 10-cc applicators, package of 12
247512	Insulating oil pipette

Lubricants

Part	Description
900223	Parker O-ring grease, 4 oz
900252	Molydisulfide

© 2013 Nordson Corporation
All rights reserved

© 2013 Nordson Corporation
All rights reserved

Tools, Tubing, and Equipment Covers

Gun Wrenches

Part	Description
152999	Wrench, airless gun (A4B, A7A)
901911	Wrench, adjustable module
336642	Wrench, combination tool (Kinetix)

Kinetix Removal Tools (KVLP/Air Spray Only, Manual and Automatic)

Part	Description
1028630	Needle nose pliers, bent
1028631	Needle removal tool

Nozzle Cleaning Tools

Part	Description
901916	Vise, pin
901922	Probe, nozzle cleaning, vial of 12, size 0.007
901923	Probe, nozzle cleaning, vial of 12, size 0.011
901924	Probe, nozzle cleaning, vial of 12, size 0.014
901935	Probe, nozzle cleaning, vial of 12, size 0.003
901934	Service kit, nozzle cleaning — contains parts: 901916, 901922, 901923, and 901935
094000	Broach, nozzle, size 0.003 (use with 0.03 to 0.09 flow)
094002	Broach, nozzle, size 0.008 (use with 0.14+ flow)
901907	Brush, bottle-type
901905	Brush, tooth brush-type

Tubing

Part	Description
900509	$^1/_4$-in. OD tubing (black, polyethylene)
900511	$^3/_8$-in. OD tubing (black, polyethylene)
900513	$^1/_2$-in. OD tubing (natural, nylon)
900556	$^1/_4$-in. OD tubing (natural, nylon)
900557	$^3/_8$-in. OD tubing (natural, nylon)

© 2013 Nordson Corporation
All rights reserved

Tools, Tubing, and Equipment Covers

Equipment Covers

Part	Description
	AN-9, AN-10, CA-10, Kinetix and Trilogy Automatic Guns
156098	One cover
106403	10 covers
	RA-12, RA-20, RA-20R Rotary Atomizers
169649	One cover
	AN-8 Plus, Kinetix and Trilogy Manual Guns
227583	One cover
227584	12 covers

© 2013 Nordson Corporation
All rights reserved

Non-Loading kV Meter Kit

Part	Description
185807	Non-loading kV meter kit

Wet Film Gauges

Part	Description
	Wet Film Gauges
790010	$^1/_2$–20 mils
790015	4–60 mils
790020	10–500 microns

Dry Film Gauges

Part	Description
	Dry Film Gauges
1033184	0.00–200 mils (0.0–5000 microns), FE/NFE, built-in probe
1033182	0.00–200 mils (0.0–5000 microns), FE/NFE, wireless, w/memory
1033183	0.00–200 mils (0.0–5000 microns), FE/NFE, wireless probe

© 2013 Nordson Corporation
All rights reserved

© 2013 Nordson Corporation
All rights reserved

Miscellaneous

Part	Description
247648	Injection medical alert card
242654	Cabinet gasket
296093	Three-conductor unshielded cable
600065	Stick-on Nordson decal
900222	Nordson blue spray paint, can
900236	PTFE sealant paste
- - - - - -	Double-thick PTFE pipe-thread tape
900517	Spiral tubing, 102-mm (4-in.) long
902504	PTFE tape
931105	Black electrical tape
939110	Small tie wraps, 4 in.
939004	Large tie wraps, 7 in.
939171	Jumbo tie wraps, 13 in.

© 2013 Nordson Corporation
All rights reserved

© 2013 Nordson Corporation
All rights reserved

Section 12
Continuous Coater

General Information **12-1**
Description 12-1
Pumping and Control Unit 12-1
Automatic Viscosity Control 12-1
Exhaust System 12-1
Features 12-1

© 2013 Nordson Corporation
All rights reserved

Table of Contents

© 2013 Nordson Corporation
All rights reserved

General Information

Description

The Nordson continuous coater consists of a hot airless spray system connected to a custom-designed spray cabinet. Spray nozzles inside the cabinet provide uniform coverage of the product as it passes through the coater. Coating material that does not deposit on the product is collected in a sump on the bottom of the spray cabinet. This unused material then passes through a strainer and a pump and is returned to the main material supply for reuse.

Pumping and Control Unit

The hydraulic controls station contains the fluid circuitry of the continuous coater. This station siphons coating material from the supply source to a high-pressure airless pump, where fluid pressures ranging from 21–170 bar (300–2500 psi) are developed. As the coating material exits the pump, it flows through heaters where the viscosity is reduced and stabilized. The coating material is then filtered and transferred to the spray nozzles in the coater cabinet.

Automatic Viscosity Control

The automatic viscosity control (AVC) monitors and controls the coating material viscosity.

Exhaust System

The continuous coater cabinet includes an integral dry filter exhaust system utilizing standard size disposable filter media. When connected to the customer supplied exhaust fan and ducting, the system creates a draft at the entry and exit port of the cabinet to prevent the escape of material fumes and particles.

Features

- Custom-designed cabinet to accommodate wide variety of part sizes and configurations
- Uniform coating at desired film thickness
- Highly adaptable to in-line production
- Accommodates a broad range of line speeds
- High material utilization

Continuous coaters are custom-engineered to suit particular customer needs. For more information, talk to your Nordson representative or contact:

Nordson Corporation
Liquid Systems Group
555 Jackson Street
Amherst, OH 44001
Phone: (800) 433-9319 or (800) 275-6357
Fax: (888) 229-4580

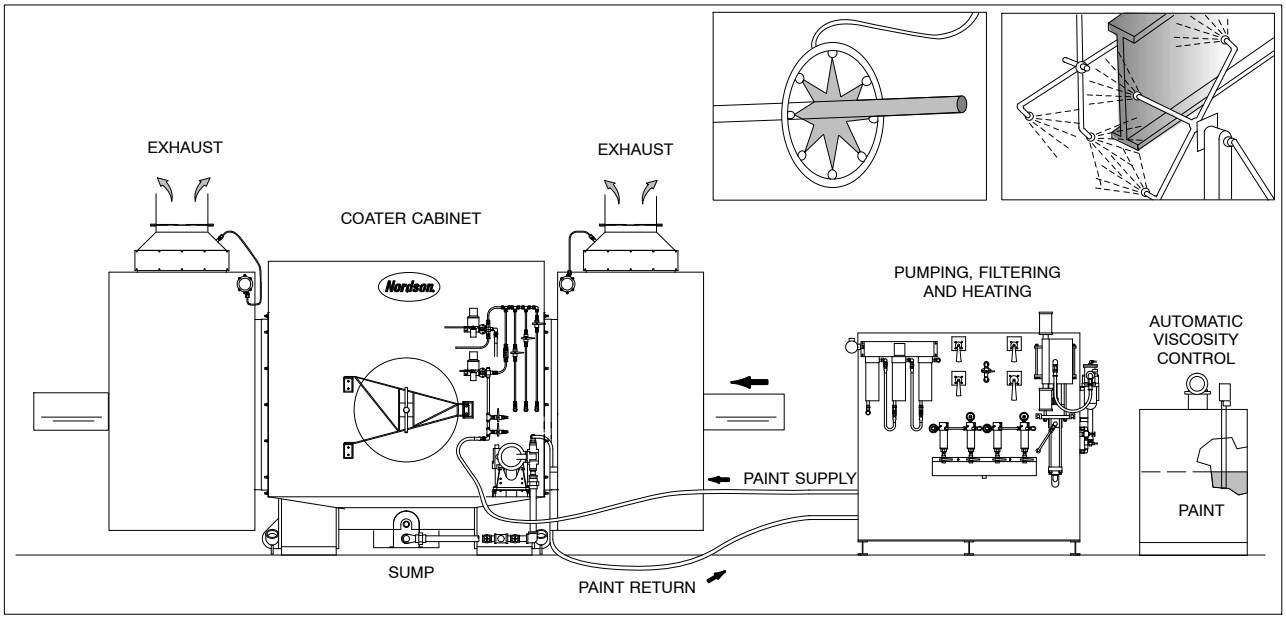

© 2013 Nordson Corporation
All rights reserved

© 2013 Nordson Corporation
All rights reserved

Section 13
System Layouts

System Layout Drawings will be shipped as they become available.

© 2013 Nordson Corporation
All rights reserved

Table of Contents

© 2013 Nordson Corporation
All rights reserved

Section 14
Miscellaneous Technical Information

Heating Coating Materials **14-1**
Definitions 14-1
Heated System Considerations 14-1
Heated System Recommendations 14-2
Heated System Benefits 14-2
Calculating Minimum Wattage 14-2
Paint Heater Calculation 14-3
Typical Heat Factors 14-4
Transmission Loss (Heat Loss) 14-4

Packing Gland and Solvent Chamber Fluid Selection Guide **14-5**
Pump Packing and Solvent Chamber Fluid Guide 14-5

Fluid Pressure Loss Related to Flow Rate, Viscosity, and Conductor Size **14-7**
Volumetric Content of Pipe Hose and Tube per Foot 14-8

Viscosity Conversion Chart **14-9**

Effect of Temperature on a Typical Enamel **14-11**

Fluid Delivery **14-13**
Fluid Delivery Charts 14-14

Coating Material Coverage **14-15**

Automatic Spray Systems Reciprocator Speed **14-17**

Compressed Air **14-19**
Compressed Air 14-19
Length of Pipe-Run in Feet 14-19
Air Pressure Drop at 12 cfm 14-20

Variables Affecting Color Match **14-21**

© 2013 Nordson Corporation
All rights reserved

Table of Contents

Solvent Evaporation **14-23**

Troubleshooting Film Faults **14-25**
Air Spray Film Faults 14-25
Airless Film Faults 14-26
Rotary Atomizer Film Faults 14-27

Solvents **14-29**

Product Names of Glycol Ethers and Glycol Ether Esters **14-31**

Resins **14-33**

Resistivity Information **14-35**
Non-Polar Materials 14-35
Polar Materials 14-35

© 2013 Nordson Corporation
All rights reserved

Heating Coating Materials

Definitions

Symbol/Term	Description
ΔT	Temperature differential
kW	Kilowatt = 1 kW = 1000 watts
hp	Horsepower = 1 hp = 0.746 kW
BTU	British thermal unit. Energy required to raise temperature of 1 lb of water 1 °F.
BTUH	BTUs per hour
kWh	Kilowatts per hour
gph	Gallon per hour
Specific Heat	BTUs required to raise temperature of 1 lb of any material 1 °F. Specific heat of water and steel = 1 BTU.
Transmission Loss (Heat Loss)	Loss of energy through perimeter of the heat conductive components. Calculation: (1 BTU) (ft^2) (ΔT) (specific heat)
Heat Loading	Total energy required to raise and maintain temperature of • Fluid: (1 BTU) (lb) (ΔT) (specific heat) • Conductors (tubing and components): (1 BTU) (lb) (ΔT) (specific heat) • Conductive losses • Transmission losses: (1 BTU) (ft^2) (ΔT) (specific heat)
Input Energy	Energy consuming devices are usually rated by the amount of input energy they use as opposed to their output of related efficiency. • A 100-watt light bulb consumes 100 watts or 0.01 kW. The amount of light output is expressed in lumens. • The NH-4 heaters are rated at 1700 watts (1.7 kW). This is the input energy and actual gph output rating differs based on the heat transfer surface and energy efficiency.

Heated System Considerations

- Maximum time user can wait until system reaches operating temperature
- Temperature sensitivity of the coating material
- Heater location
- Heater design, not input wattage alone
- Minimum and maximum environmental temperature difference

© 2013 Nordson Corporation
All rights reserved

Heating Coating Materials

Heated System Recommendations

- Size of 30–60 fpm velocity
- Calculate from rate at each point of system
- Use thermal shut-offs wherever possible
- Insulate all conductors

Heated System Benefits

- Consistent film build
- Reduces need for solvents

Calculating Minimum Wattage

Calculate the minimum heater wattage using this formula:

$$\text{Minimum heater wattage} = \frac{\text{Flow rate} \times 60}{6} \times \frac{(\text{spray temperature}) - (\text{room temperature})}{100\ ^\circ\text{F}} \times 1000\text{W}$$

NOTE: Flow rate is determined by nozzle size: For example, a 06 nozzle flow is 0.06 gpm; a 09 nozzle flow is 0.09 gpm; and a 20 nozzle flow is 0.20 gpm.

NOTE: 1000 W will raise temperature of an organic solvent coating 100 °F at a flow rate of 6 gph. Waterborne coatings require approximately twice this wattage.

Example 1: A lacquer is sprayed from a number 20 nozzle at 150 °F and at a room temperature of 70 °F. Calculate the minimum heater wattage.

Minimum heater wattage	=	$\frac{0.20 \times 60}{6}$	x	$\frac{(150-70\ ^\circ\text{F})}{100\ ^\circ\text{F}}$	x	1000W
		$\frac{12}{6}$	x	$\frac{80\ ^\circ\text{F}}{100\ ^\circ\text{F}}$	x	1000 W
		2	x	0.80 °F	x	1000 W
Minimum heater wattage	=	1600 W				
NOTE: Each heater uses 1700 watts						
		1600 W	÷	1700 W	=	1 heater

© 2013 Nordson Corporation
All rights reserved

Calculating Minimum Wattage *(contd)*

Example 2: A lacquer is sprayed from four number 20 nozzles at 150 °F and at a room temperature of 70 °F. Calculate the minimum heater wattage.

Minimum heater wattage	=	$\frac{(4 \times 0.20) \times 60}{6}$	x	$\frac{(150–70\ °F)}{100\ °F}$	x	1000W	
		$\frac{48}{6}$	x	$\frac{80\ °F}{100\ °F}$	x	1000 W	
		8	x	0.80 °F	x	1000 W	
Minimum heater wattage	=	6400 W					
NOTE: Each heater uses 1700 watts							
		6400 W	÷	1700 W	=	4 heaters	

Paint Heater Calculation

	Factor		**Temperature Rise**		**Typical Heat Factor** (Refer to the *Typical Heat Factors* table)		**Flow**	
oz/min	3	X	ΔTf	X	Heat factor	X	oz/min x 60	= total watts
				1280				
gpm	3	X	ΔTf	X	Heat factor	X	gpm x 60	= total watts
				10				

© 2013 Nordson Corporation
All rights reserved

Heating Coating Materials

Typical Heat Factors

Coating Material	Typical Heat Factors Heat Factor = lb/gal x specific heat		
	lb/gal	Specific Heat	Heat Factor
Alcohol	6.7	0.6	4.0
Aliphatic Solvent	6.3	0.52	3.3
Aromatic Solvent	7.3	0.47	3.4
Enamel	8.0	0.42	3.4
Iron Oxide Primer	10.0	0.42	4.2
Ketone Solvent	6.7	0.57	3.8
Lacquer	7.6	0.50	3.8
Paraffin (Molten)	7.5	0.71	5.3
Polyester Resin	9.4	0.41	3.9
Varnish	8.0	0.50	4.0
Water	8.3	1.00	8.3
Water Emulsion	10.7	0.56	6.0

Transmission Loss (Heat Loss)

Transmission loss is calculated for heat-conductive components suspended in still air. No calculations can be made for air drafts or conductors attached directly to walls or floors.

NOTE: Covered lines reduce loss by 50%.

Approximate Transmission Loss	
Component	**Watts Lost**
Pump	200 watts
Hose, Nylon ($^1/_4$–$^3/_8$-in. dia)	3 watts per ft
Hose, PTFE and steel ($^1/_4$-in. dia)	4 watts per ft
Tubing, $^3/_8$-in. dia	6 watts per ft
Pipe	8–12 watts per ft

© 2013 Nordson Corporation
All rights reserved

Packing Gland and Solvent Chamber Fluid Selection Guide

Pump Packing and Solvent Chamber Fluid Guide

Other packing types are available for special applications. Contact your Nordson Corporation representative for more information. Recommended pH range is 4.5–9.0.

MATERIAL TYPE	SOLVENT FAMILY	ABRASIVE QUALITY	PACKING TYPE	SOLVENT FLUID
Waterborne	Water	Mild	D	T, Q
		Medium	G	T, Q
		High	U	T, Q
	Alcohols	Mild	D	T, Q
		Medium	G	T, Q
		High	U	T, Q
Solventborne	Ketones (e.g., acetone, MEK, MAK, etc.)	Mild	F, L	K, S
		Medium	F, L	K, S
		High	U	K, S
	Aromatic Hydrocarbons (e.g., xylene, toluene, etc.)	Mild	F, L	K, S
		Medium	F, L	K, S
		High	F, U(1)	K, S
	Alcohols	Mild	D	K, Q
		Medium	G	T, Q
		High	U	K, Q
	Aliphatic Petroleum Naphthas	Mild	D	K, S
		Medium	D	K, S
		High	G	T, Q
	Chlorinated Solvents	Mild	F, L	K, S
		Medium	F, L	K, S
		High	F, L	K, S

(1) Some swelling may occur when using Type-U packings with aromatic hydrocarbons.

© 2013 Nordson Corporation
All rights reserved

© 2013 Nordson Corporation
All rights reserved

Fluid Pressure Loss Related to Flow Rate, Viscosity, and Conductor Size

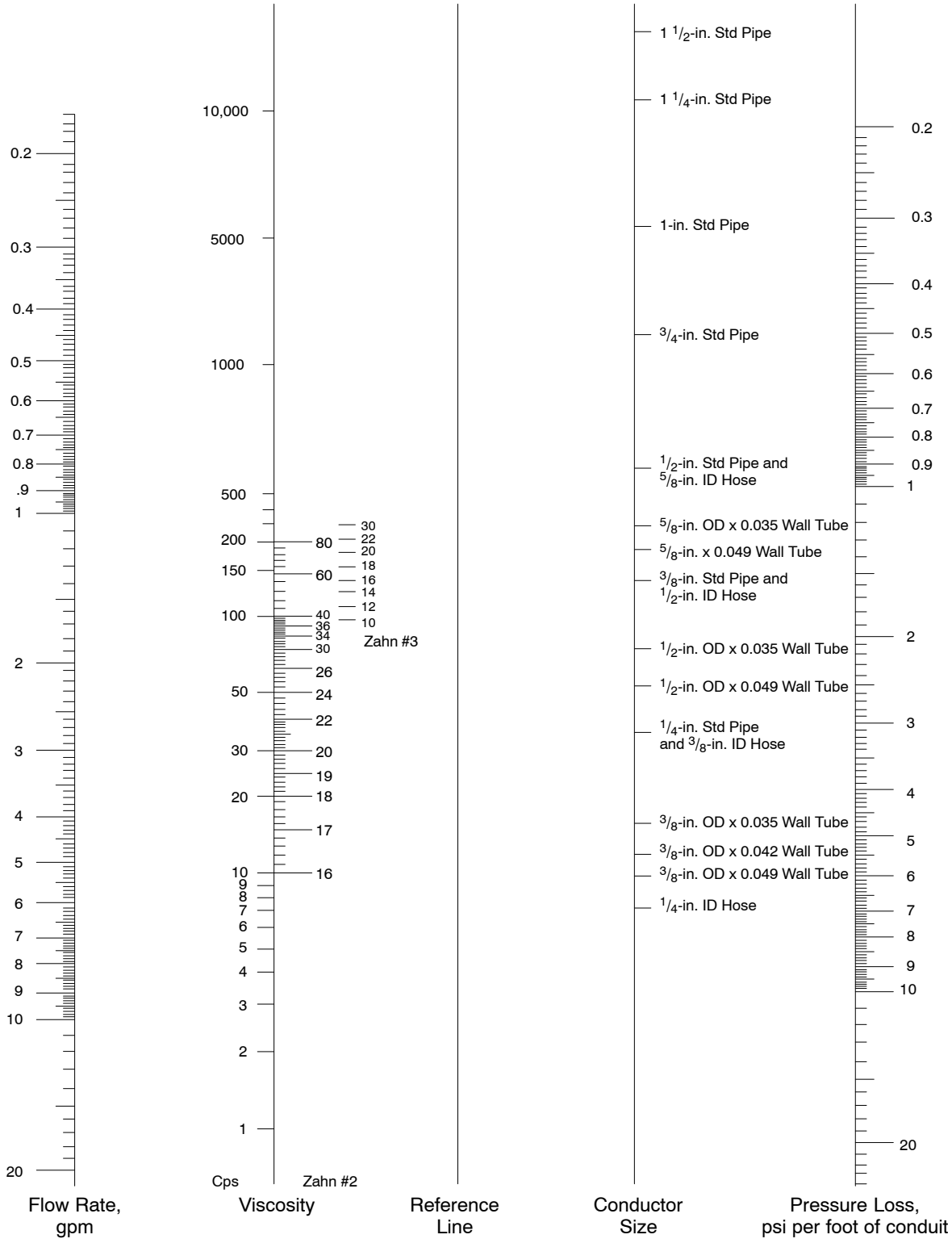

© 2013 Nordson Corporation
All rights reserved

Fluid Pressure Loss Related to Flow Rate, Viscosity, and Conductor Size

Volumetric Content of Pipe Hose and Tube per Foot

	ID									
	$^3/_{16}$-in.	$^1/_4$-in.	$^5/_{16}$-in.	$^3/_8$-in.	$^1/_2$-in.	$^3/_4$-in.	1-in.	$1^1/_4$-in.	$1^1/_2$-in.	2-in.
Gal	0.001	0.003	0.004	0.005	0.009	0.027	0.040	0.067	0.087	0.160
Fl oz	0.120	0.400	0.530	0.670	0.800	2.930	5.130	8.500	11.530	20.600

© 2013 Nordson Corporation
All rights reserved

Viscosity Conversion Chart

Poise	Centi–poise	Zahn #2	Zahn #3	Zahn #4	Zahn #5	Ford Cup #3	Ford Cup #4	Sears Crafts–man Cup	DuPont Parlin #7	DuPont Parlin #10	Fisher #1	Fisher #2	Gardner – Holdt Bubble	Krebs Units KU	Seibolt Universal SSU
0.1	10	16					5		27	11	20		A–4		60
0.15	15	17					8		30	12	25		A–3		80
0.2	20	18				12	10		32	13	30	15			100
0.25	25	19				15	12		37	14	35	17	A–2		130
0.3	30	20				19	14		43	15	39	18	A–1		160
0.4	40	22				25	18	19	50	16	50	21	A		210
0.5	50	24				29	22	20	57	17		24		30	260
0.6	60	27				33	25	21	64	18		29	B	33	320
0.7	70	30				36	28	23		20		33		35	370
0.8	80	34				41	31	24		22		39	C	37	430
0.9	90	37	10			45	32	26		23		44		38	480
1.0	100	41	12	10		50	34	27		25		50	D	40	530
1.2	120	49	14	11		58	41	31		30		62	E	43	580
1.4	140	58	16	13		66	45	34		32			F	46	690
1.6	160	66	18	14			50	38		37			G	48	790
1.8	180	74	20	16			54	40		41				50	900
2.0	200	82	23	17	10		58	44		45			H	52	1000
2.2	220		25	18	11		62						I	54	1100
2.4	240		27	20	12		65						J	56	1200
2.6	260		30	21	13		68							58	1280
2.8	280		32	22	14		70						K	59	1380
3.0	300		34	24	15		74						L	60	1475
3.2	320		36	25	16								M		1530
3.4	340		39	26	17								N		1630
3.6	360		41	28	18								O	62	1730
3.8	380		43	29	19										1850
4.0	400		46	30	20		107						P	64	1950
4.2	420		48	32	21										2050
4.4	440		50	33	22								Q		2160
4.6	460		52	34	23								R	66	2270
4.8	480		54	36	24									67	2380
5.0	500		57	37	25		133						S	68	2480
5.5	550		63	40	27								T	69	2660
6.0	600		68	44	30								U	71	2900
7.0	700			51	35									74	3375
8.0	800			58	40									77	3880
9.0	900			64	45		199						V	81	4300
10.0	1000				49								W	85	4600
11.0	1100				55									88	5200
12.0	1200			69										92	5620
13.0	1300				64		375						X	95	6100
14.0	1400													96	6480
15.0	1500													98	7000
16.0	1600													100	7500
17.0	1700													101	8000
18.0	1800												Y		8500
19.0	1900														9000
20.0	2000													103	9400
21.0	2100														9850
22.0	2200														10300
23.0	2300												Z	105	10750
24.0	2400													109	11200
25.0	2500												Z–1	114	11600
30.0	3000														

Water = 1 centipoise.
Wash primers = 10–15 centipoise.
Sealers/primers = 20–25 centipoise.
Lacquers (thinned/enamels/varnishes) = 30–70 centipoise.
Fillers/latex/vinyls = 80–140 centipoise.
Oil SAE 30 = 190 centipoise.
Oil trans SAE 90 = 550 centipoise.
Lacquer (unthinned) = 1100 centipoise.

© 2013 Nordson Corporation
All rights reserved

© 2013 Nordson Corporation
All rights reserved

Effect of Temperature on a Typical Enamel

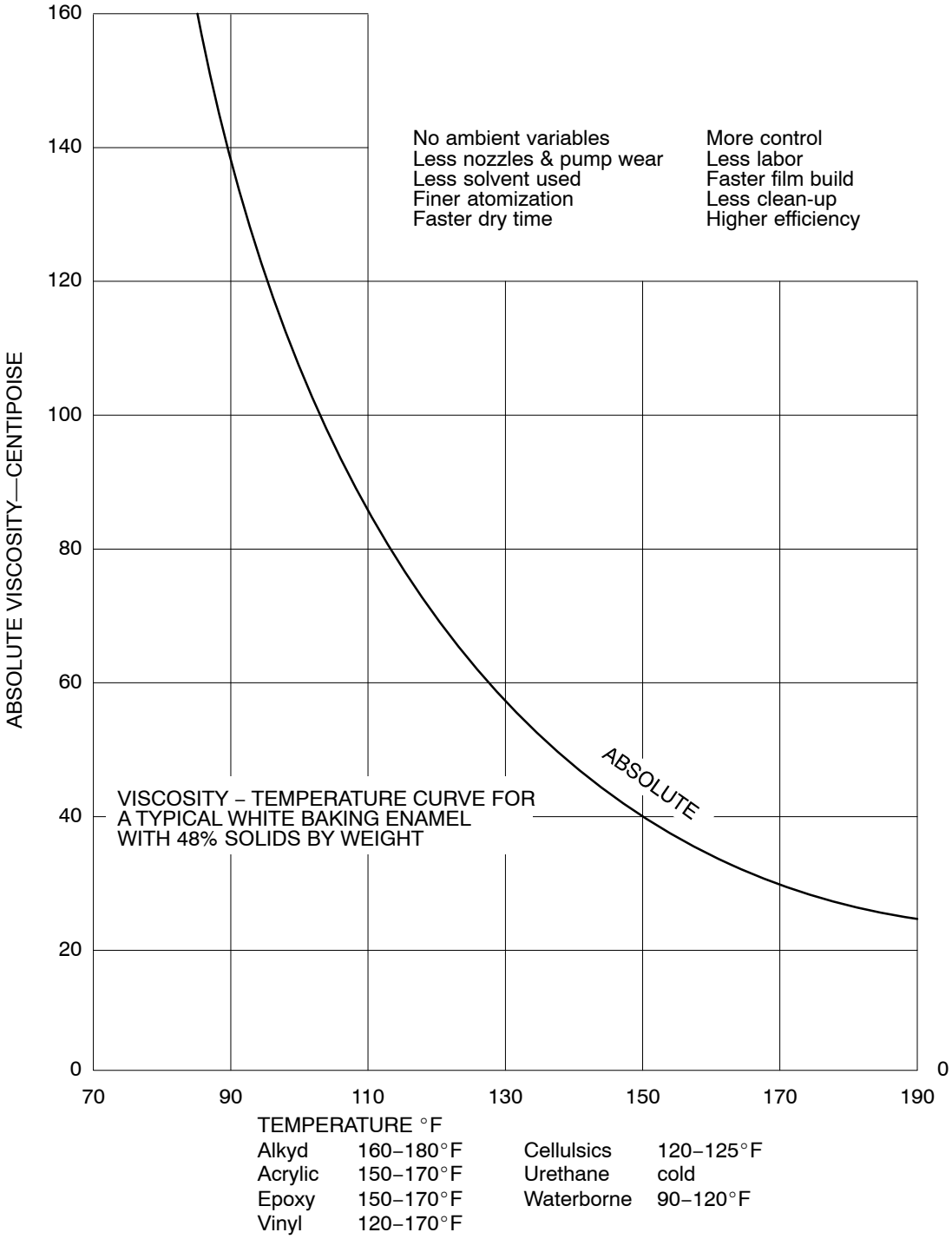

Alkyd	160–180°F	Cellulsics	120–125°F
Acrylic	150–170°F	Urethane	cold
Epoxy	150–170°F	Waterborne	90–120°F
Vinyl	120–170°F		

© 2013 Nordson Corporation
All rights reserved

© 2013 Nordson Corporation
All rights reserved

Fluid Delivery

When high fluid pressure is used to maintain the correct flow rate (delivery), high atomizing air pressure must also be used. The high air pressure causes solvent loss, dry spray, poor flow, and poor transfer efficiency. To prevent this, refer to the *Fluid Delivery Charts* in this section to help you select the proper fluid tip. For example, if the material you are spraying has a viscosity of 22 sec on a Zahn #2 and needs a delivery of 24 oz/min, then selecting a 0.46 fluid tip and fluid pressure of 1.1 bar (16 psi) would be more efficient than a 0.040 tip at 1.79 bar (26 psi).

If you use a 0.070 tip with fluid pressure of 0.41 bar (6 psi), the air cap and the front of the gun could become contaminated with overspray.

© 2013 Nordson Corporation
All rights reserved

Fluid Delivery

Fluid Delivery Charts

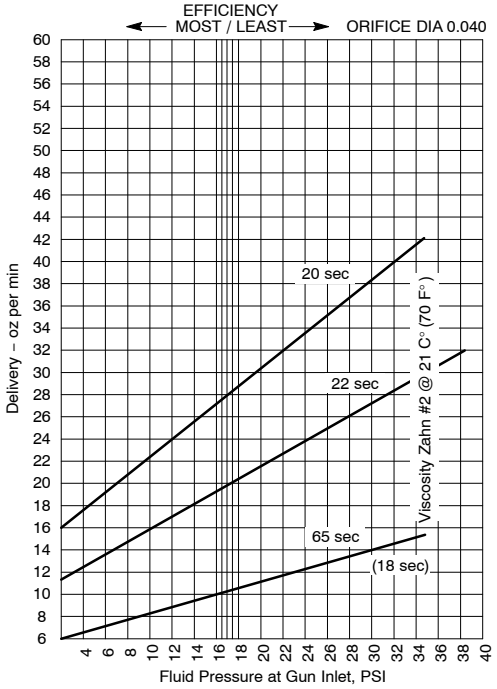

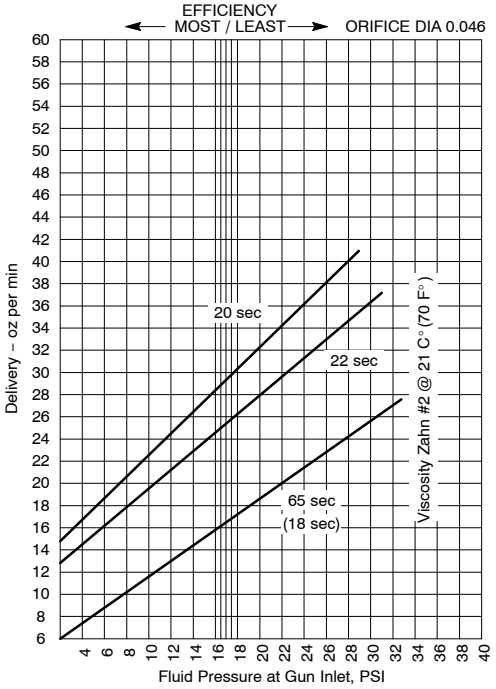

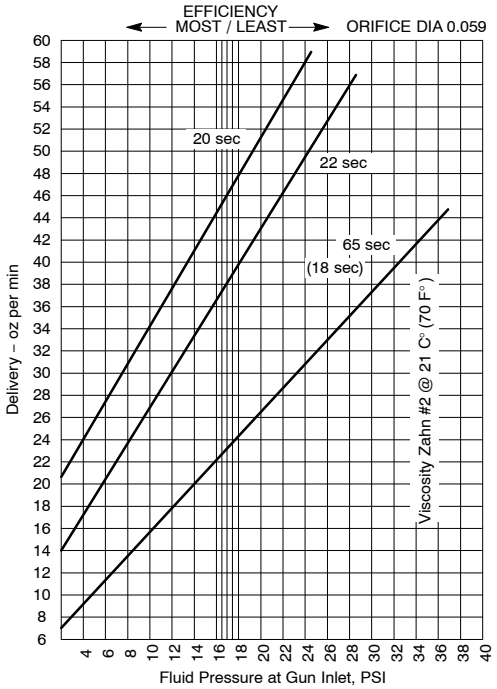

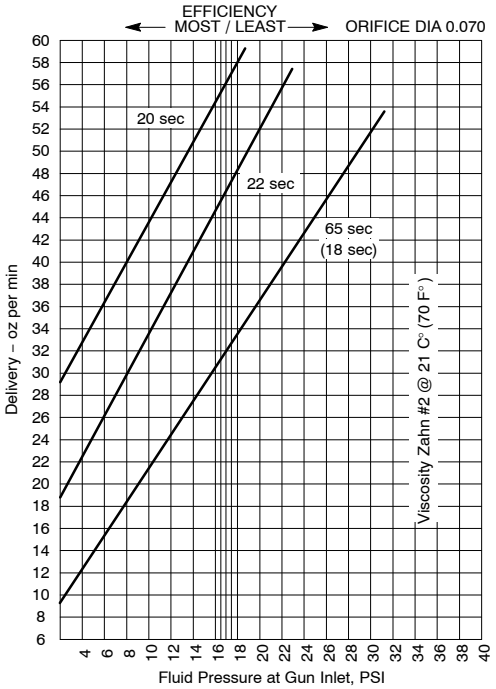

© 2013 Nordson Corporation
All rights reserved

Coating Material Coverage

Coating material coverage is measured as one mil thickness/square feet per gallon.

Percent Solids Content	Efficiency %															
	25	30	35	40	45	50	55	60	65	70	75	80	85	90	95	100
24	96	115	134	154	173	192	211	231	250	269	288	308	327	346	365	385
26	104	125	146	166	187	208	229	250	271	292	312	333	354	375	396	417
28	112	134	157	179	202	224	247	269	292	314	336	359	381	404	426	449
30	120	144	168	192	216	240	264	288	312	336	360	385	409	433	457	481
32	128	154	179	205	231	256	282	308	333	359	385	410	436	462	487	513
34	136	163	190	218	245	272	300	327	354	381	409	436	463	490	518	545
36	144	173	202	231	259	288	317	346	375	404	433	462	490	519	548	577
38	152	182	213	243	274	304	335	365	396	426	457	487	518	548	579	609
40	160	192	224	256	288	320	352	385	417	449	481	513	545	577	609	641
42	168	202	235	269	303	336	370	404	437	471	505	539	572	606	640	673
44	176	211	247	282	317	352	388	423	458	494	529	564	600	635	670	705
46	184	221	258	295	332	369	405	442	479	516	553	590	627	664	701	737
48	192	231	269	308	346	385	423	462	500	539	577	616	654	693	731	770
50	200	240	280	320	360	401	441	481	521	561	601	641	681	721	762	802
52	208	250	292	333	375	417	458	500	542	583	625	667	709	750	792	834
54	216	259	303	346	389	433	476	519	563	606	649	693	736	779	822	866
56	224	269	314	359	404	449	494	539	583	628	673	718	763	808	853	898
58	232	279	325	372	418	465	511	558	604	651	697	744	790	837	883	930
60	240	288	336	385	433	481	529	577	625	673	721	770	818	866	914	962
62	248	298	348	397	447	497	547	596	646	696	745	795	845	895	944	994
64	256	308	359	410	462	513	564	616	667	718	770	821	872	924	975	1026
66	264	317	370	423	476	529	582	635	688	741	794	847	900	952	1005	1058
68	272	327	381	436	490	545	600	654	709	763	818	872	927	981	1036	1090
70	280	336	393	449	505	561	617	673	729	786	842	898	954	1010	1066	1122
72	288	346	404	462	519	577	635	693	750	808	866	924	981	1039	1097	1155
74	296	356	415	474	534	593	652	712	771	831	890	949	1009	1068	v127	1187
76	304	365	426	487	548	609	670	731	792	853	914	975	1036	1097	1158	1219
78	312	375	437	500	563	625	688	750	813	875	938	1001	1063	1126	1188	1251
80	320	385	449	513	577	641	705	770	834	898	962	1026	1090	1155	1219	1283
82	328	394	460	526	591	657	723	789	855	920	986	1052	1118	1183	1249	1315
84	336	404	471	539	606	673	741	808	875	943	1010	1078	1145	1212	1280	1347
86	344	413	482	551	620	689	758	827	896	965	1034	1103	1172	1241	1310	1379
88	352	423	494	564	635	705	776	847	917	988	1058	1129	1199	1270	1341	1411
90	360	433	505	577	649	721	794	866	938	1010	1082	1155	1227	1299	1371	1443
92	369	442	546	590	664	737	811	885	959	1033	1106	1180	1254	1328	1402	1475
94	377	452	527	603	678	754	829	904	980	1055	1130	1206	1281	1357	1432	1507
96	385	462	539	616	693	770	847	924	1001	1078	1155	1232	1309	1386	1453	1540
98	393	471	550	628	707	786	864	943	1021	1100	1179	1257	1336	1414	1493	1572
100	401	481	561	641	721	802	882	962	1042	1122	1203	1283	1363	1443	1524	1604

Formula:

$$\frac{E \times 231 \times VS \times 1{,}000}{144} = \text{Sq ft per gal (one mil thickness)}$$

Where:

E = efficiency
231 = cubic inches per gallon
VS = total volume solids content on the coating
1,000 = conversion factor
144 = square inches per foot

Example:

Efficiency of equipment = 55%
Percent volume solids content = 46%

$$\frac{.55 \times 231 \times .46 \times 1{,}000}{144} = 406 \text{ sq ft per gallon at 1 mil}$$

© 2013 Nordson Corporation
All rights reserved

© 2013 Nordson Corporation
All rights reserved

Automatic Spray Systems Reciprocator Speed

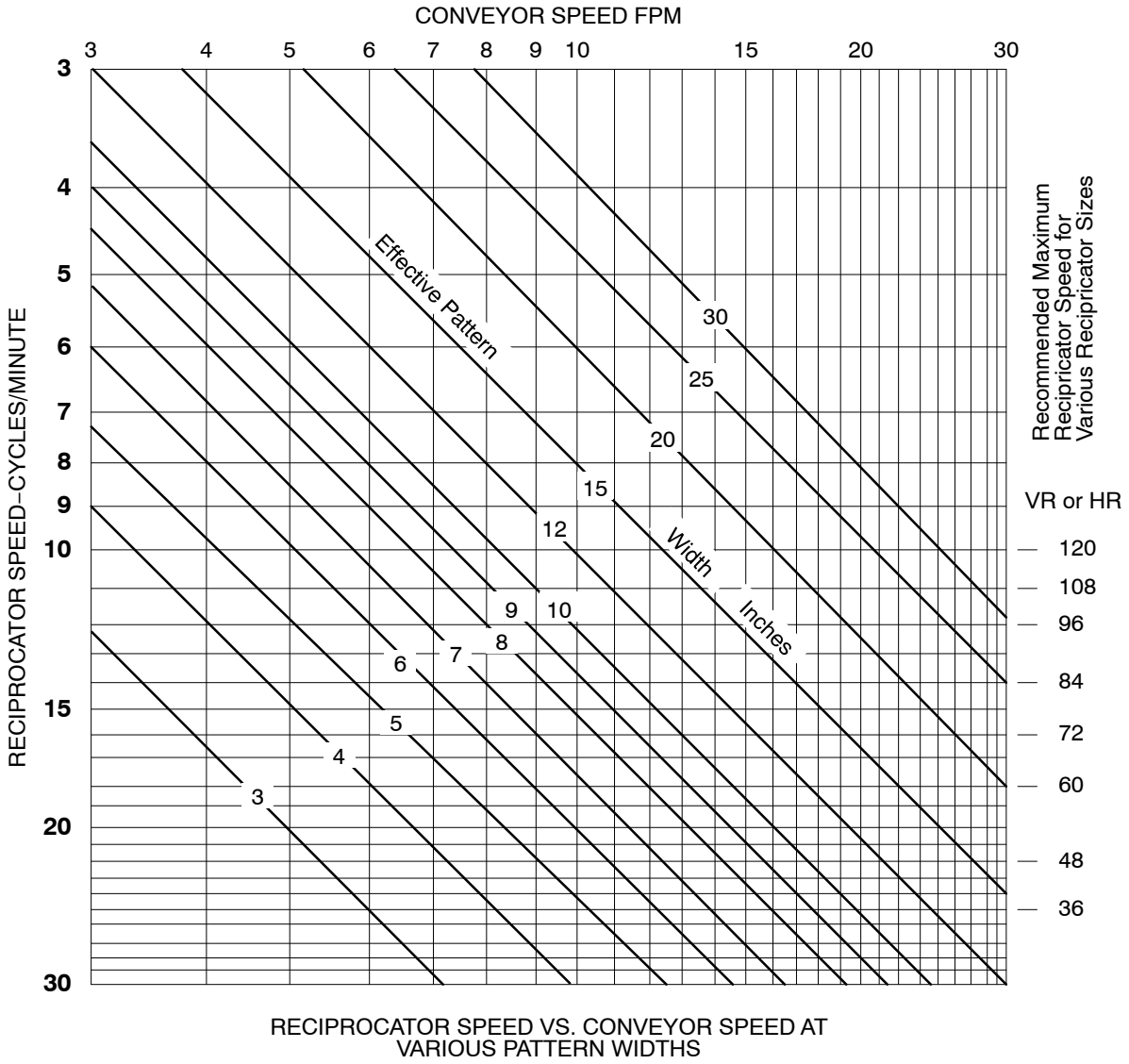

RECIPROCATOR SPEED VS. CONVEYOR SPEED AT
VARIOUS PATTERN WIDTHS

1. Select conveyor speed.
2. Follow the vertical line down to intersect the pattern line.
3. Follow lines horizontally to the left and read the number of cycles required.

Example:
Given Conveyor Speed = 8 fpm and 10 in. fan pattern width = 9.5, use 9 cycles/minute

© 2013 Nordson Corporation
All rights reserved

© 2013 Nordson Corporation
All rights reserved

Compressed Air

It is difficult to estimate the scfm of air flow a pipe will carry. On some applications, such as in a large plant with many circuits, the air flow will be at a fairly steady rate. Other applications may call for a high surge of air.

If a compressor were running continuously at 7 bar (100 psi) and the output is flowing at a steady rate, the hp rating would be approximately $3^1/_3$–4 scfm/hp.

Length of Pipe-Run in Feet

NOTE: Each pipe fitting is equal to a 5 foot length of pipe.

scfm Flow	25 ft	50 ft	75 ft	100 ft	150 ft	200 ft	300 ft	500 ft	1000 ft	Comp. hp
4	$^1/_2$	$^1/_2$	$^1/_2$	$^1/_2$	$^1/_2$	$^1/_2$	$^1/_3$	$^3/_4$	$^3/_4$	1
12	$^1/_2$	$^3/_4$	$^1/_2$	$^3/_4$	$^3/_4$	$^3/_4$	$^3/_4$	1	1	3
20	$^3/_4$	$^3/_4$	$^3/_4$	$^1/_2$	1	1	1	$1^1/_4$	$1^1/_4$	5
30	$^3/_4$	$^3/_4$	1	1	1	1	$1^1/_4$	$1^1/_4$	$1^1/_4$	$7^1/_2$
40	$^3/_4$	1	1	1	$1^1/_4$	$1^1/_4$	$1^1/_4$	$1^1/_2$	$1^1/_2$	10
60	1	1	$1^1/_4$	$1^1/_4$	$1^1/_4$	$1^1/_4$	$1^1/_2$	$1^1/_2$	2	15
80	1	$1^1/_4$	$1^1/_4$	$1^1/_4$	$1^1/_2$	$1^1/_2$	$1^1/_2$	2	2	20
100	$1^1/_4$	$1^1/_4$	$1^1/_4$	$1^1/_3$	$1^1/_2$	2	2	2	$2^1/_2$	25
120	$1^1/_4$	$1^1/_2$	$1^1/_3$	$1^1/_3$	2	2	2	$2^1/_2$	$2^1/_2$	30
160	$1^1/_4$	$1^1/_2$	$1^1/_2$	2	2	2	$2^1/_2$	$2^1/_2$	3	40
200	$1^1/_2$	2	2	2	2	$2^1/_2$	$2^1/_2$	3	3	50
240	$1^1/_2$	2	2	2	$2^1/_2$	$2^1/_2$	$2^1/_2$	3	3	60
300	2	2	2	$2^1/_2$	$2^1/_2$	3	3	3	$3^1/_2$	75
400	2	$2^1/_2$	$2^1/_2$	$2^1/_2$	3	3	3	$3^1/_2$	4	100
500	2	$2^1/_2$	$2^1/_2$	3	3	3	$3^1/_2$	$3^1/_2$	4	125

© 2013 Nordson Corporation
All rights reserved

Compressed Air

Air Pressure Drop at 12 cfm

Pressure Reading at the Input Gauge, lb	Pressure (lb) at the Gun Output for Various Hose Lengths								
	Air Hose ID, in.	5 ft length	10 ft length	15 ft length	20 ft length	25 ft length	50 ft length	75 ft length	100 ft length
40	1/4	34	32	31	29	27	16	—	—
	5/16	38	37	37	37	36	32	32	29
	3/8	38	37	37	36	36	34	32	30
50	1/4	43	40	38	36	34	22	—	—
	5/16	47	47	46	46	45	40	40	37
	3/8	47	46	46	46	45	42	40	38
60	1/4	51	48	46	43	51	29	—	—
	5/16	56	56	55	55	54	49	48	45
	3/8	56	55	55	54	54	51	48	45
70	1/4	59	56	53	52	48	36	—	—
	5/16	66	65	64	63	63	57	55	52
	3/8	65	64	64	63	62	59	56	52
80	1/4	68	64	61	58	55	43	—	—
	5/16	75	74	73	72	71	66	63	59
	3/8	74	73	73	72	71	67	63	59
90	1/4	76	71	68	65	61	51	—	—

© 2013 Nordson Corporation
All rights reserved

Variables Affecting Color Match

Variable	To Make Colors Lighter	To Make Colors Darker
Finishing Area Environment		
Temperature	Increase	Decrease
Humidity	Decrease	Increase
Spray Techniques		
Gun	Increase distance, speed	Decrease distance, speed
Flash time between coats	Allow more flash time	Allow less flash time
Mist coat	Will not lighten color	Wetter mist coat
Spray Equipment and Adjustments		
Fluid tip or airless nozzle	Use smaller size	Use larger size
Air cap	Use cap with more flow	Use cap with less flow
Fluid adjustment valve	Decrease material flow	Increase material flow
Fan adjustment valve	Increase fan width	Decrease fan width
Atomizing air pressure at gun	Increase air pressure	Decrease air pressure
Rotary cup speed	Increase speed	Decrease speed
Shaping air	Decrease shaping air	Increase shaping air
Solvent Usage		
Solvent evaporation speed	Use faster evaporating solvent	Use slower evaporating solvent
Reduction of coating	Increase amount of solvent	Decrease amount of solvent
Use of retarder	Do not use retarder	Add retarder

© 2013 Nordson Corporation
All rights reserved

© 2013 Nordson Corporation
All rights reserved

Solvent Evaporation

The following table lists the factors that increase the rate of solvent evaporation. The table also lists the relative importance of each factor in the spray process.

1 = most important
2 = somewhat important
3 = least important

Factors	Spray Process									
Evaporation rate increases when any of these factors increase	Air Spray		Air Electrostatic		Airless		Airless Electrostatic		Rotary Atomizer	
	Heated	Cold	Heated	Cold	Heated	Cold	Heated	Cold	Heated	Cold
Temperature of Liquid	1	3	1	2	1	3	1	2	1	2
Area of Liquid Exposed (Degree of Atomization)	Fine 1	Med 2	Fine 1	Med 2	Med 2	Coarse 3	Fine 1	Coarse 3	Very fine 1	Very fine 1
Atomizer-to-Work Distance	1	3	1	2	1	3	1	2	1	2
Electrostatic Charge	—	—	1	1	—	—	1	1	1	1
Solvent Balance to Compensate for Characteristics of the Spray Process	Slow	Normal	Slow	Normal	Slow	Fast	Slow	Normal	Very slow	Very slow

© 2013 Nordson Corporation
All rights reserved

© 2013 Nordson Corporation
All rights reserved

Troubleshooting Film Faults

Air Spray Film Faults

Most film faults occur when the coating material droplets arriving at the part are too wet or too dry. Making minor changes to the coating material or process should solve most problems. The left of each chart lists the faults. The matrix on the right lists ways to correct the fault by making the paint wetter (W) or drier (D), or by adding more (+) or less (–) of the topic to the application process.

SOLUTION ➧ It may be necessary to apply more than one solution to a given fault FAULT ➧	Make coating material W=Wetter / D=Dryer	Atomizing air pressure	Fluid pressure	Gun to work distance	More same solvent	Faster solvent or co-solvent	Slower solvent or co-solvent	Coating material temperature	Distance between spray coatings	Electrostatic voltage	Waterborne only		
											Water	Flash-off time	Relative humidity
Orange peel	W	–	+	–	+	–	+	–	–	+	+	+	+
Sagging	D	+	–	+	–	+	–	+	+	–	–	–	–
Dry spray	W	–	+	–	+	–	+	–	–	–	–	+	+
Cobwebbing	W	–	+	–	+	–	+	–	0	–	–	0	–
Low gloss	W	–	+	–	+	–	+	–	–	+	+	+	+
Fatty edges	D	+	–	+	–	+	–	+	+	–	–	–	–
Fish eyes	D	+	–	+	–	+	–	+	+	–	0	0	0
Popping(1)	D	+	–	+	–	+	–	+	–	–	+	+	–
Blushing	W	–	+	–	0	–	+	+	0	+	0	+	0
Mottling	D	+	–	+	–	+	–	–	–	–	–	–	–
Overspray cratering	W	–	+	–	+	–	+	–	–	0	+	0	0
Edge pull	D	+	–	+	–	+	–	+	+	–	–	–	–
Mud cracking	W	–	+	–	+	–	+	–	–	+	+	0	–
Color mismatch	D	+	–	+	–	+	–	+	+		–	–	–
Stripping	Clean or replace air cap and fluid tip												
Wrinkling	D	+	0	+	0	+	0	+	+		–	–	–
Poor hiding	Mix paint well												
Bubbles/Foaming	W	–	+	–	0	–	+	–	–	+	+	+	+
Cracking, crazing, peeling, blistering and oven fouling: look to part preparation or oven													

(1) Popping with air dry and baking materials may differ. A slow solvent added to a bake material may hold the surface of the film open long enough to let the major solvents escape during the temperature rise of the part in the oven.

© 2013 Nordson Corporation
All rights reserved

Troubleshooting Film Faults

Airless Film Faults

SOLUTION ➧ / It may be necessary to apply more than one solution to a given fault / FAULT ➧	Make coating material W=Wetter / D=Dryer	Fluid pressure	Coating material temperature	Restrictor or turb plate	Nozzle flow rate	Fan pattern width	Gun to work distance	More same solvent	Faster solvent or co-solvent	Slower solvent or co-solvent	Distance between spray stations	Electrostatic voltage	Shear force	Water-borne only: Water	Water-borne only: Relative humidity
Orange peel(1)	W	+	–	+	+	–	–	+	–	+	–	+	0	+	+
Sagging	D	–	+	–	–	+	+	–	+	–	+	–	0	–	–
Dry Spray	W	–	–	+	+	–	–	+	–	+	–	–	0	–	+
Cobwebbing	W	–	–	+	+	–	–	+	–	+	0	–	0	–	–
Low gloss	W	–	–	+	+	–	–	+	–	+		+	–	+	+
Fatty edges	D	–	+	–	–	–	+	–	+	–	+	–	0	–	–
Fish eyes	D	–	+	–	–	+	+	–	+	–	+	–	0	–	0
Popping(2)	D	–	+	–	–	+	+	–	+		–	–	–		–
Blushing	W	+	+	+	+	–	–	0	–	+	0	+	0	0	0
Mottling	D	–	–	–	–	+	+	–	+	–	–	–	0	–	–
Overspray cratering	D	–		–	+	–	–	+	–	+	–	0	0	–	0
Edge pull	D	–	+	–	–	+	+	–	+	–	+	–	0	–	–
Bubbles/Foaming(3)	W	+	–	+	+	–	–	NA	–	+	+	+	–	+	+
Color mismatch	D	–	+	–	–	+	+	–	+	–	+	–	–	–	–
Stripping		+	+	–	–	–	0	0	0	0	0	0	0	0	0
Wrinkling(4)	D	–	+	–	–	+	+	0	+	0	+	–	0	–	–
Poor hiding	Mix paint well														
Mud cracking	W	+	–	+	+	–	+	0	–	+	+	+	0	+	–
Cracking, crazing, peeling, blistering and oven fouling: look to part preparation or oven															

(1) pH (coater only)

(2) Popping with air dry and baking materials may differ. A slow solvent added to a bake material may hold the surface of the film open long enough to let the major solvents escape during the temperature rise of the part in the oven.

(3) May require an additive.

(4) Possible oven fouling.

© 2013 Nordson Corporation
All rights reserved

Troubleshooting Film Faults

Rotary Atomizer Film Faults

SOLUTION ➧ / It may be necessary to apply more than one solution to a given fault / FAULT ➧	Make coating material W=Wetter / D=Dryer	Fluid pressure	Coating material temperature	Turbine speed	Shaping air	Electrostatic voltage	Rotary to work distance	More same solvent	Faster solvent or co-solvent	Slower solvent or co-solvent	Distance between spray stations	Flash off time	Water-borne only: Water	Water-borne only: Relative humidity
Orange peel	W	+	–	–	+	+	–	+	–	+	–	+	+	+
Sagging	D	–	+	+	–	–	+	–	+	–	+	–	–	–
Dry Spray	W	–	–	–	+	–	–	+	–	+	–	+	–	+
Cobwebbing	W	–	–	–	+	+	–	+	–	+	0	0	–	–
Low gloss	W	–	–	–	+	+	–	+	–	+		+	+	+
Fatty edges	D	–	+	+	–	–		–	+	–	+	–	–	–
Fish eyes	D	–	+	+	–	–	+	–	+	–	+	0	0	0
Popping(1)	D	–	+	+	–	–	+	–	+	0	–	+	+	–
Blushing	W	+	+	–	+	+	–	0	–	+	0	+	0	0
Mottling	D	–	–	+	–	+	+	–	+	–	–	–	–	–
Mud cracking	W	+	–	–	+	+	–	+	–	+	–	0	+	–
Edge pull	D	–	+	+	–	–	+	–	+	–	+	–	–	–
Color mismatch	D	–	+	+	–	+	+	–	+	–	+	–	–	–
Stripping	W	+	+	–	+	+	–	0	0	0	0	+	0	0
Bubbles/Foaming(3)	W	+	+	–	+	+	–	0	0	+	+	+	+	+
Wrinkling(2)	D	–	+	–	–	+	+	0	+	0	+	–	–	–
Poor hiding	Mix paint well/Put more on													
Cracking, crazing, peeling, blistering and oven fouling: look to part preparation or oven														

(1) Popping with air dry and baking materials may differ. A slow solvent added to a bake material may hold the surface of the film open long enough to let the major solvents escape during the temperature rise of the part in the oven.

(2) Possible oven fouling.

(3) May require an additive, also use finned cup.

© 2013 Nordson Corporation
All rights reserved

© 2013 Nordson Corporation
All rights reserved

Solvents

	SOLVENT	Speed of Evaporation	Electrical Resistance	KB Value	Vapor Pressure @ 20 °C MMHG	Boiling Range° F	Flash Point° F TCC	Rule 66 Exempt
Alphatic Hydrocarbon		N Butyl Ace = 1						
A	Hexane	8.1	> 20	28	140	150–158	0	YES
B	Cyclohexane	5.2	> 20	55	45	175–180	0	YES
C	Heptane	4.5	> 20	32		202–209	25	YES
D	VMGP naphtha	0.45	> 20	32	2	246–278	52	YES
E	Odorless mineral spirits	0.2	> 20	28	0.5	351–395	128	YES
Aromatic								
F	Toluene (Toluol)	1.5	> 20	105	38	230–233	45	NO
G	Xylene (Xylol)	0.75	> 20	98	9.5	280–288	90	NO
H	SC100	0.19	> 20	90	0.1	315–350	110	NO
I	SC150	0.04	> 20	90	0.1	360–400	140	NO
Ketones								
J	MEK — methyl ethyl ketone	4.6	0.2	–	70.6	172–176	24	YES
K	MIBK — methyl isobutyl ketone	1.6	0.4	–	16	237–243	61	NO
L	Diacetone alcohol, AF	0.14	< 0.1	–	1	293–342	120	NO
M	Cyclohexanone	0.31	< 0.1	–	7 at 30°	313–316	112	YES
N	Isophorone	0.03	< 0.1	–	0.2	410–424	180	NO
Alcohols								
O	Isopropyl 91%	1.6	1.7	–	31.5	176–178	63	YES
P	N-propyl alcohol	0.89	1.0	–	14.5	205–208	74	YES
Q	Isobutyl alcohol	0.63	0.6	–	8.8	225–228	86	YES
R	N butyl alcohol	0.46	0.5	–	4.39	241–245	96	YES
S	Methyl amy alcohol (MIBC)	0.30	0.3	–	2.2	266–271	103	YES
T	Cyclohexanol	0.08	0.08	–	1	320–325	140	YES

© 2013 Nordson Corporation
All rights reserved

Solvents

	SOLVENT	Speed of Evaporation	Electrical Resistance	KB Value	Vapor Pressure @ 20 °C MMHG	Boiling Range° F	Flash Point° F TCC	Rule 66 Exempt
Acetates		N Butyl Ace = 1						
U	Ethyl acetate 99%	4.1	4.1	–	75	168–172	26	YES
V	Isopropyl acetate	3.1	3	–	23	187–194	47	YES
W	N butyl acetate	1	1	–	7.8	244–262	81	YES
X	Isobutyl rate	0.43	0.4	–	–	291–304	101	YES
Glycol Ether Acetates								
Y	Glyco ether acetate EM	0.2	–	–	2	284–297	120	YES
Z	Glyco ether acetate EE	0.2	< 0.1	–	1.7	302–320	130	YES
AA	Glyco ether acetate EB	0.03	< 0.2	–	0.29	367–381	160	YES
AB	Glyco ether acetate DE	< 0.01	< 0.2	–	0.05	417–430	235 c.o.c.	YES
AC	Glyco ether acetate DB	< 0.01	< 0.3	–	< 0.001	455–482	240 c.o.c.	YES
Glycol Ethers								
AD	Ethylene glycol monoethyl ether (EE)	0.2	< 0.1	–	5.3	273–277	105	YES
AE	Ethylene glycol monoethyl ether (DE)	< 0.01	< 0.2	–	0.13	374–401	196	YES
AF	Ethylene gylcol monoethyl ether (DB)	< 0.01	< 0.3	–	0.023	441–455	230 pm cc	YES
AG	Ethylene gylcol monoethyl ether (EB)	0.1	< 0.2	–	0.88	336–343	150	YES
AH	Ethylene gylcol monoethyl ether (DM)	< 0.01	< 0.2	–	0.18	378–385	195 pm cc	YES

© 2013 Nordson Corporation
All rights reserved

Product Names of Glycol Ethers and Glycol Ether Esters

Company Name	Glycol Ethers				
	Ethylene Glycol Monoethyl Ether	Ethylene Glycol Monobutyl Ether	Diethylene Glycol Monomethyl Ether	Diethylene Glycol Monoethyl Ether	Diethylene Glycol Monobutyl Ether
Dow Chemical Co.	Ektasolve EE	Ektasolve EB	Ektasolve DM	Ektasolve DE	Ektasolve DB
Eastman Chemical	Cellosolve	Butyl Cellosolve	Methyl Carbitol	Carbitol (low gravity)	Butyl Carbitol
ICI America Inc.	—	Dowanol EB	Dowanol DM	Dowan DE	Dowanol DB
Olin Corp.	Oxitol	Butyl Oxitol	Methyl Dioxitol	Dioxitol (low gravity)	Butyl Dioxitol
Shell Chemical Co.	Poly-solve EE	Poly-solve EB	Poly-solve DM	Poly-solve DE (low gravity)	Poly-solve DB
Union Carbide Corp.	EE	EB	—	DE	DB

Company Name	Glycol Ether Esters			
	Ethylene Glycol Monoethyl Ether Acetate	Ethylene Glycol Monobutyl Ether Acetate	Diethylene Glycol Monomethyl Ether Acetate	Diethylene Glycol Monobutyl Ether Acetate
Eastman Chemical	Ektasolve EE Acetate	Ektasolve EB Acetate	Ektasolve DE Acetate	Ektasolve DB Acetate
ICI America Inc.	Cellosolve Acetate	—	—	—
Union Carbide Corp.	EE Acetate	EB Acetate	—	DB Acetate

© 2013 Nordson Corporation
All rights reserved

© 2013 Nordson Corporation
All rights reserved

Resins

Resins	Modifer for	Modified with	Final Film Forming	Solvent for Fast Drying	Solvent for Medium Drying	Solvent for Slow or Retarded Drying
Acrylic	Alkyd	Milamine Urea	Air dry and bake	Toluene (toluol)	Xylene (xylol)	SC150
Aklyd	Varnish–Oleoresinous	Acrylic Milamine Phenolic Polyster Silicone Vinyl	Air dry and bake	Toluene (toluol)	Xylene (xylol)	SC100
Cellulose Acetate Butyrate			Air dry			
Epoxy	See note(1)		Bake	Toluene (toluol)	Xylene (xylol)	SC100
Epoxy Ester			Air dry and bake	N butyl alcohol Toluene (toluol)	Xylene (xylol)	Xylene (xylol) SC100
Milamine	Acrylic Alkyd		Bake	Toluene (toluol)	Xylene (xylol)	Odorless mineral spirits
Nitrocellulose		Milamine	Air dry			
Phenolic	Aklyd		Air dry and bake	Toluene (toluol)	Xylene (xylol)	SC100
Polyamide	Epoxy					
Polyester	Alkyd		Bake			
Rubber–Chlorinated	See note(1)					
Shellac			Air dry			
Silicone	Alkyd	Alkyd	Bake	Toluene (toluol)	Xylene (xylol)	SC100
Styrenated Alkyd			Air dry and bake	Toluene (toluol)	Xylene (xylol)	SC100
PTFE			Bake			
Urea	Acrylic(1)		Bake	Ethyl acetate 99%	Isopropyl 91%	N butyl alcohol
Urethane	Varnish–Oleoresinous		Air dry and catalized			
Varnish–Oleoresinous		Alkyd Varnish–Oleoresinous	Air dry	Toluene (toluol) MEK	Xylene (xylol) MIBK	SC150 Cyclo–hexanone
Vinyl	Alkyd		Air dry	MEK	MIBK	

(1) Often used to modify other resins.

© 2013 Nordson Corporation
All rights reserved

© 2013 Nordson Corporation
All rights reserved

Resistivity Information

Non-Polar Materials

Adding the following solvents will cause the coating material to become less conductive, increase the megohm reading, and move the needle of the paint resistivity meter to the left:

- Toluene
- Xylene
- SC-100
- SC-150
- Cellosolve acetate
- EE acetate
- Mineral spirits
- Butyl acetate
- Kerosene
- Super VM and P naphtha
- Pine oil

Polar Materials

Adding of the following solvents will cause the coating material to become more conductive, decrease the megohm reading, and move the needle of the paint resistivity meter to the right:

- MEK
- MIBK
- butyl cellosolve
- butyl carbitol
- dowanol DB
- lacquer thinner
- acetone
- methanol

NOTE: Be certain the solvents used are compatible with coating material. Refer to the *Solvents* chart in this section for additional solvent resistivity values.

© 2013 Nordson Corporation
All rights reserved

Resistivity Information

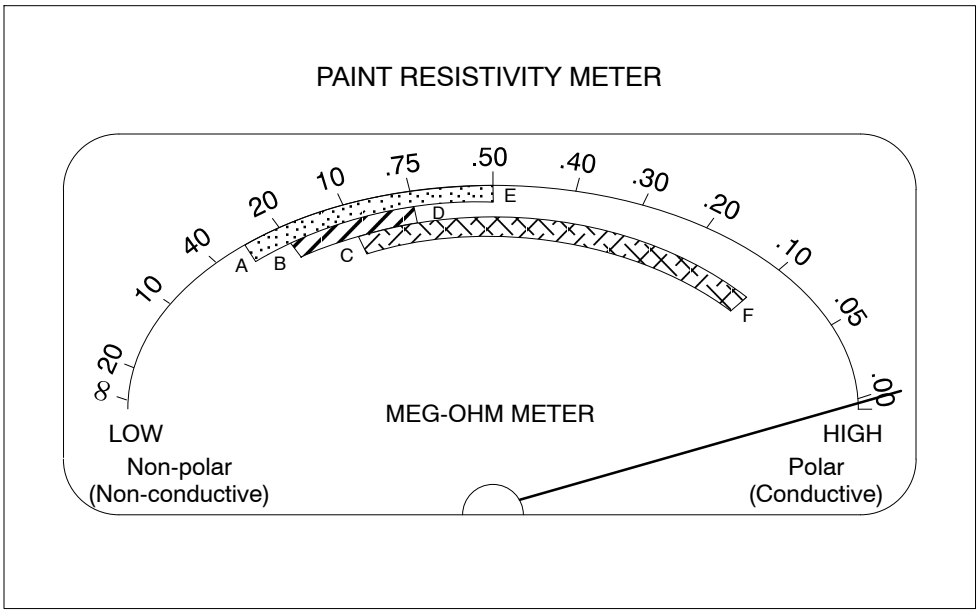

Legend:

- – Best range for air spray electrostatic 0.5–3.0 range — A to E scale. For use with Trilogy KVLP, AN-8 Plus, AN-9, and AN-10.
- – Best range for airless electrostatic 0.75–2.0 range — B to D scale. For use with Kinetix Air-Assisted Airless, Kinetix Airless, C-1, CA-1, and CA-10.
- – Best range for RA20 rotary 0.10–1.0 range — C to F scale.

NOTE: Readings outside these ranges are often acceptable.

© 2013 Nordson Corporation
All rights reserved

Index

A

A4B Manual Airless Spray Gun
description: *sec2* 2-47
features: *sec2* 2-47
ordering information: *sec2* 2-49
specifications: *sec2* 2-48

A7A Automatic Airless Spray Gun
description: *sec2* 2-51, 2-55
features: *sec2* 2-51
fittings: *sec2* 2-54
ordering information: *sec2* 2-52, 2-53
specifications: *sec2* 2-52

AD−29 and AD−29A Automatic Air Spray Gun
description: *sec2* 2-61
features: *sec2* 2-61
ordering information: *sec2* 2-62
specifications: *sec2* 2-61

Air Caps
air spray: *sec1* 1-24; *sec2* 2-82
selection guide: *sec1* 1-24; *sec2* 2-82
HVLP
application key: *sec2* 2-79
production and compliance: *sec2* 2-78
selection guide: *sec2* 2-78
selection table: *sec2* 2-80
KVLP
application key: *sec1* 1-21
production and compliance: *sec1* 1-20
selection guide: *sec1* 1-20
selection table: *sec1* 1-22

Air Hose, Prism: *sec9* 9-57

Air Hoses, Kinetix: *sec1* 1-34

Air Pressure Gauges: *sec11* 11-1

Air Pressure Regulators: *sec11* 11-2

Air Relay Valves
description: *sec8* 8-17
ordering information: *sec8* 8-18
specifications: *sec8* 8-18

Air Spray Spray Guns
AD−29 and AD29A, automatic: *sec2* 2-61
Maverick: *sec2* 2-63
Prism HVLP and air spray, automatic: *sec2* 2-73, 2-75
Prism HVLP and air spray, manual: *sec2* 2-73, 2-75
Trilogy AC Manual: *sec2* 2-33
Trilogy AS Automatic: *sec2* 2-39
Trilogy AS Manual: *sec2* 2-19
Trilogy GP Manual: *sec2* 2-27
Trilogy LP Automatic: *sec2* 2-39
Trilogy Manual: *sec2* 2-19
Trilogy QC Automatic: *sec2* 2-39

Air Tubing, Prism: *sec9* 9-58

Air Tubing Option, Kinetix, low pressure: *sec1* 1-35; *sec9* 9-56

Air−Assisted Airless Spray Guns
Kinetix, automatic: *sec1* 1-17
Kinetix, manual: *sec1* 1-15
Trilogy Automatic: *sec2* 2-13
Trilogy LT Manual: *sec2* 2-7
Trilogy Manual: *sec2* 2-1

Airless Spray Guns
A4B, manual: *sec2* 2-47
A7A, automatic: *sec2* 2-51
Kinetix, automatic: *sec1* 1-18
Kinetix, manual: *sec1* 1-16
Quattro: *sec2* 2-51

Automatic Spray Guns
A7A airless: *sec2* 2-51
AD−29 and AD29A Air Spray: *sec2* 2-61
Kinetix air−assisted airless: *sec1* 1-17
Kinetix airless: *sec1* 1-18
Prism HVLP and air spray: *sec2* 2-73, 2-75
Quattro: *sec2* 2-51
Trilogy AAA: *sec2* 2-13
Trilogy AS: *sec2* 2-39
Trilogy LP: *sec2* 2-39
Trilogy QC: *sec2* 2-39

B

Ball Valves
description: *sec8* 8-9
ordering information: *sec8* 8-10

Black Rubber Hose, Prism: *sec9* 9-57

© 2013 Nordson Corporation
All rights reserved

Index

C

Circulation Valves
  description: *sec8* 8-11
  ordering information: *sec8* 8-11

Coating Material Coverage: *sec14* 14-15

Color Change Manifolds
  configurable: *sec8* 8-4
  high pressure: *sec8* 8-1
    description: *sec8* 8-1
    ordering information: *sec8* 8-2
  low pressure: *sec8* 8-3
    description: *sec8* 8-3
    features: *sec8* 8-3
    ordering information: *sec8* 8-4

Common Accessories
  Kinetix Removal Tools: *sec11* 11-5
  measuring instruments: *sec11* 11-7
  miscellaneous: *sec11* 11-9
  pressure gauges, regulators: *sec11* 11-1, 11-2
  solvent chamber fluids, oils, grease, lubricants: *sec11* 11-3
  tools, tubing, equipment covers: *sec11* 11-5, 11-6
  tubing: *sec11* 11-5

Compliance Air Caps
  HVLP: *sec2* 2-78
  KVLP: *sec1* 1-20

Compressed Air: *sec14* 14-19, 14-20

Configurable Manifolds: *sec8* 8-4

Continuous Coater
  description: *sec12* 12-1
    automatic viscosity control: *sec12* 12-1
    exhaust system: *sec12* 12-1
    pumping and control unit: *sec12* 12-1
  features: *sec12* 12-1

D

Dielectric Grease, ordering information: *sec11* 11-3

Disk Filters
  description: *sec7* 7-7
  ordering information: *sec7* 7-7

Dry Film Gauges: *sec11* 11-7

E

Effect of Temperature on a Typical Enamel: *sec14* 14-11

Electro−Pneumatic Solenoid Valves
  description: *sec8* 8-15
  ordering information: *sec8* 8-16
  specifications: *sec8* 8-15

Electrostatic Spray Guns
  Kinetix automatic air−assisted airless: *sec1* 1-17
  Kinetix automatic airless: *sec1* 1-18
  Kinetix manual airless: *sec1* 1-16
  Kinetix, manual air−assisted airless: *sec1* 1-15

Equipment Covers: *sec11* 11-6

F

Filters
  dual−filter assembly: *sec7* 7-1
  in−line: *sec7* 7-5
  nozzle disk: *sec7* 7-7
  single−filter assembly: *sec7* 7-1

Fittings
  high−pressure hose: *sec9* 9-7
    circulation block: *sec9* 9-11
    female connector: *sec9* 9-8
    hose−to−hose connectors: *sec9* 9-7
    hose−to−hose swivel elbows: *sec9* 9-7
    pipe−to−hose elbows: *sec9* 9-10
    straight pipe−to−hose connectors: *sec9* 9-9
  high−pressure pipe
    90 degree elbows: *sec9* 9-25
    male and female pipe reducing bushings: *sec9* 9-21
    male reducers: *sec9* 9-22
    nipples: *sec9* 9-19
    pipe couplings: *sec9* 9-20
    pipe plugs: *sec9* 9-23
    pipe tees: *sec9* 9-26
    street elbows: *sec9* 9-24
  High−Pressure Pipe, Airless: *sec9* 9-19
  High−pressure swivel connectors: *sec9* 9-13
  high−pressure tube: *sec9* 9-27
    pipe−to−tube male connectors: *sec9* 9-27
    pipe−to−tube male elbows: *sec9* 9-28
  low−pressure air for plastic tube: *sec9* 9-41
    branch tees: *sec9* 9-42
    bulkhead connector: *sec9* 9-42
    bulkhead unions: *sec9* 9-43
    male connectors: *sec9* 9-45
    male elbows: *sec9* 9-44
    male run tees: *sec9* 9-43
    union tees: *sec9* 9-41
    union Y: *sec9* 9-41

© 2013 Nordson Corporation
All rights reserved

F(contd)

low−pressure hose: *sec9* 9-33
  female connectors: *sec9* 9-33
  female swivel connectors: *sec9* 9-33
  hose−to−hose adapters: *sec9* 9-35
  pipe−to−hose male adapters: *sec9* 9-34
  quick disconnect air: *sec9* 9-36
low−pressure pipe: *sec9* 9-29
  bulkhead fittings: *sec9* 9-32
  couplings: *sec9* 9-32
  cross: *sec9* 9-29
  elbows: *sec9* 9-30
  nipples: *sec9* 9-31
  street elbows: *sec9* 9-30
  tees: *sec9* 9-29
low−pressure plastic : *sec9* 9-47
  grooving tools for low−pressure plastic fittings: *sec9* 9-51
  male branch tees w/nuts: *sec9* 9-50
  male elbows: *sec9* 9-49
  straight male connectors: *sec9* 9-47
  tube nuts w/ferrule: *sec9* 9-48
low−pressure tube: *sec9* 9-37
  female pipe−to−tube connector w/ferrule: *sec9* 9-39
  nut w/ferrule: *sec9* 9-38
  pipe−to−tube connectors w/ferrule: *sec9* 9-38
  pipe−to−tube elbows w/ferrule: *sec9* 9-37
  tube−to−pipe or tube to tube tees w/ferrule: *sec9* 9-39
  tube−to−tube connectors w/ferrule: *sec9* 9-37
Prism: *sec9* 9-58
Teflon for AN−9 and AN−10 guns: *sec9* 9-53
  bushing: *sec9* 9-53
  elbows: *sec9* 9-53
  straight: *sec9* 9-54

Fittings and Hoses
  Kinetix: *sec9* 9-55, 9-56
  Prism: *sec9* 9-57

Fixed Orifice
  ordering information: *sec8* 8-8
  regulator: *sec8* 8-7
  valves: *sec8* 8-7

Fluid Delivery: *sec14* 14-13, 14-14

Fluid Hoses and Accessories, Kinetix
  automatic guns: *sec1* 1-35; *sec9* 9-56
  manual guns: *sec1* 1-34; *sec9* 9-55

Fluid Pressure Gauges: *sec11* 11-1

Fluid Tips
  air spray: *sec1* 1-23; *sec2* 2-81
    selection guide: *sec1* 1-23; *sec2* 2-81
  HVLP: *sec2* 2-77
    selection guide: *sec2* 2-77
  KVLP: *sec1* 1-19
    selection guide: *sec1* 1-19

G

Gravity Spray Guns
  Trilogy AS Manual: *sec2* 2-19
  Trilogy GP Manual: *sec2* 2-27
  Trilogy LVLP Manual: *sec2* 2-19
  Triogy AC Manual: *sec2* 2-33

Gun Mounting Bar: *sec2* 2-89

Gun Wrenches: *sec11* 11-5

H

Heaters, NH−4
  description: *sec7* 7-9
  features: *sec7* 7-9
    benefits: *sec7* 7-10
    general operation: *sec7* 7-10
  ordering information: *sec7* 7-12
    external adjustment thermostat: *sec7* 7-13
    Japan only heaters: *sec7* 7-13
    replacement kits and heater cartridges: *sec7* 7-14
    stainless steel heaters: *sec7* 7-13
    standard heaters: *sec7* 7-12
  specifications: *sec7* 7-11

Heating Coating Materials: *sec14* 14-1, 14-2, 14-3, 14-4

High−Pressure Spray Guns
  A4B manual airless: *sec2* 2-47
  A7A automatic airless: *sec2* 2-51
  AD−29 and AD−29A automatic air spray: *sec2* 2-61
  Kinetix air−assisted airless, automatic: *sec1* 1-17
  Kinetix air−assisted airless, manual: *sec1* 1-15
  Kinetix airless manual: *sec1* 1-16
  Kinetix automatic airless, automatic: *sec1* 1-18
  Trilogy AAA Automatic: *sec2* 2-13
  Trilogy AAA Manual: *sec2* 2-1
  Trilogy AAA−LT Manual: *sec2* 2-7

© 2013 Nordson Corporation
All rights reserved

H(contd)

Hoses
air supply: *sec9* 9-6
grounded air hose w/fittings installed: *sec9* 9-6
high−pressure fluid: *sec9* 9-1
Isocore ”B”: *sec9* 9-4
Kinetix: *sec1* 1-34
low−pressure air tubing: *sec9* 9-6
low−pressure fluid: *sec9* 9-3
Prism: *sec9* 9-58
Teflon fluid: *sec9* 9-4
Teflon tubing: *sec9* 9-5

Hoses and Fittings
Kinetix: *sec9* 9-55, 9-56
Prism: *sec9* 9-57

HVLP Spray Guns, Maverick HVLP: *sec2* 2-67

I

In−Line Check Valves: *sec8* 8-13

In−Line Filters
description: *sec7* 7-5
ordering information: *sec7* 7-5

Iso−Batch Cabinet
description: *sec10* 10-7
ordering information: *sec10* 10-7
specifications: *sec10* 10-7

Iso−Flo HD Automatic Voltage Block System
description: *sec10* 10-5
features: *sec10* 10-5
ordering information: *sec10* 10-6
specifications: *sec10* 10-6

Iso−Flo HD Manual Voltage Block System
description: *sec10* 10-3
features: *sec10* 10-3
ordering information: *sec10* 10-4
specifications: *sec10* 10-4

Iso−Flo HD Voltage Block Systems, description: *sec10* 10-1

Isocoil Assembly: *sec1* 1-25
current draw: *sec1* 1-26
hose and tubing options: *sec1* 1-26
ordering information: *sec1* 1-25

K

Kinetix Accessories
air hoses: *sec1* 1-34
air hoses and fittings: *sec9* 9-55
air spray air caps: *sec1* 1-24
air spray fluid tips: *sec1* 1-23
air tubing option, automatic low−pressure gun: *sec1* 1-35; *sec9* 9-56
conical nozzles: *sec1* 1-23
current draw: *sec1* 1-26
fluid hoses and accessories
automatic guns: *sec1* 1-35; *sec9* 9-56
manual guns: *sec1* 1-34; *sec9* 9-55
Isocoil assembly: *sec1* 1-25
KVLP air caps, production and compliance: *sec1* 1-20
KVLP fluid tips: *sec1* 1-19
power supplies and options: *sec1* 1-34
repair kits: *sec1* 1-33

Kinetix Electrostatic Spray Guns, available models: *sec1* 1-12

Kinetix Gun Packages (Configured)
automatic air−assisted airless spray gun: *sec1* 1-17
automatic airless spray gun: *sec1* 1-18
manual air−assisted airless spray gun: *sec1* 1-15
manual airless electrostatic spray gun: *sec1* 1-16

Kinetix Removal Tools
bent needle nose pliers: *sec11* 11-5
needle removal tool: *sec11* 11-5

Kinetix Spray Gun Specifications
automatic
air spray, KVLP: *sec1* 1-14
air−assisted airless: *sec1* 1-14
airless: *sec1* 1-14
manual
air spray, KVLP: *sec1* 1-13
air−assisted airless: *sec1* 1-13
airless: *sec1* 1-13

Kinetix Spray Systems
accessories: *sec1* 1-19, 1-21, 1-24, 1-25, 1-27, 1-28, 1-29, 1-30, 1-31, 1-32, 1-34
cross−cut nozzle: *sec1* 1-27, 1-29
dome nozzle: *sec1* 1-30, 1-31
description: *sec1* 1-11
electrostatic spray guns: *sec1* 1-12
features: *sec1* 1-11

Kinetix Watermark Guns, accessories: *sec1* 1-19, 1-21, 1-24, 1-27, 1-28, 1-29, 1-30, 1-31, 1-32, 1-34

© 2013 Nordson Corporation
All rights reserved

L

Low−Pressure Spray Guns
Maverick : *sec2* 2-63
Maverick HVLP: *sec2* 2-67
Prism HVLP and air spray
automatic: *sec2* 2-73, 2-75
manual: *sec2* 2-73, 2-75
Trilogy AC Manual: *sec2* 2-33
Trilogy AS Manual: *sec2* 2-19
Trilogy GP Manual: *sec2* 2-27
Trilogy LP Automatic: *sec2* 2-39
Trilogy LVLP Manual: *sec2* 2-19
Trilogy QC Automatic: *sec2* 2-39

Lubricants, ordering information: *sec11* 11-3

LVLP Spray Guns
Trilogy AC Manual: *sec2* 2-33
Trilogy GP Manual: *sec2* 2-27
Trilogy LVLP Manual: *sec2* 2-19

M

Manifolds
color change: *sec8* 8-3
high pressure: *sec8* 8-1
configurable: *sec8* 8-4
high pressure: *sec8* 8-1
low pressure: *sec8* 8-3

Manual Spray Guns
A4B airless: *sec2* 2-47
Kinetix air−assisted airless: *sec1* 1-15
Kinetix airless: *sec1* 1-16
Maverick Air Spray: *sec2* 2-63
Maverick HVLP: *sec2* 2-67
Prism HVLP and air spray: *sec2* 2-73, 2-75
Trilogy AAA: *sec2* 2-1
Trilogy AAA−LT: *sec2* 2-7
Trilogy AC: *sec2* 2-33
Trilogy AS: *sec2* 2-19
Trilogy GP: *sec2* 2-27
Trilogy LVLP: *sec2* 2-19

Maverick Air Spray Gun
description: *sec2* 2-63
exploded view: *sec2* 2-64
ordering: *sec2* 2-64
specifications: *sec2* 2-63

Maverick HVLP Spray Gun
description: *sec2* 2-67
exploded view: *sec2* 2-68
features: *sec2* 2-67
ordering: *sec2* 2-68
specifications: *sec2* 2-67

Measuring Instruments
dry film gauges: *sec11* 11-7
non−loading kV meter kit: *sec11* 11-7
wet film gauges: *sec11* 11-7

Meter Kit, kV non−loading: *sec11* 11-7

Miscellaneous Valves, quick exhaust, in−line check: *sec8* 8-13

N

NH−4 Heaters. *See* Heaters, NH−4

Non−Electrostatic Accessories
gun mounting bar: *sec2* 2-89
unvalved straight−flanged mount nozzle extensions for A4B and A7A guns: *sec2* 2-89

Non−Electrostatic Spray Guns
A4B manual airless: *sec2* 2-47
A7A automatic airless: *sec2* 2-51
AD−29 and AD−29A automatic air spray: *sec2* 2-61
Maverick Air Spray: *sec2* 2-63
Maverick HVLP: *sec2* 2-67
Prism HVLP and air spray, manual: *sec2* 2-73, 2-75
Quattro Automatic: *sec2* 2-51
Trilogy AAA Automatic: *sec2* 2-13
Trilogy AAA Manual: *sec2* 2-1
Trilogy AAA−LT Manual: *sec2* 2-7
Trilogy AC Manual: *sec2* 2-33
Trilogy AS Automatic: *sec2* 2-39
Trilogy AS Manual: *sec2* 2-19
Trilogy GP Manual: *sec2* 2-27
Trilogy LP Automatic: *sec2* 2-39
Trilogy LVLP Manual: *sec2* 2-19
Trilogy QC Automatic: *sec2* 2-39

Nozzle, conical air spray, selection guide: *sec1* 1-23; *sec2* 2-81

Nozzle Cleaning Tools: *sec11* 11-5

Nozzle Disk Filters
description: *sec7* 7-7
ordering information: *sec7* 7-7

Nozzle Extensions for A4B and A7A Guns: *sec2* 2-89

Nozzles*See also* Nordson Nozzle Catalog
conical: *sec1* 1-23; *sec2* 2-81
Cross−Cut, selection guide: *sec2* 2-83, 2-84
dome nozzle, selection guide: *sec2* 2-86, 2-88

Nylon Single Layer Hose, Prism: *sec9* 9-57

© 2013 Nordson Corporation
All rights reserved

O

Ordering Parts
assistance: *Ordering* 4
how to: *Ordering* 1
terms and conditions: *Ordering* 3
warranty: *Ordering* 2

P

Packing Gland Types: *sec4* 4-6

Paint/Solvent Dump Valve
description: *sec8* 8-19
ordering information: *sec8* 8-19

Panel−Mounted Air Pressure Gauges: *sec11* 11-1

Power Supplies and Options, Kinetix: *sec1* 1-34

Pressure Gauges: *sec11* 11-1, 11-2

Pressure Regulators: *sec11* 11-1, 11-2

Prism Airless and Air−Assisted Airless Automatic Spray Guns, accessories
Cross−Cut nozzle: *sec2* 2-83, 2-84
dome nozzle: *sec2* 2-86, 2-88

Prism HVLP and Air Spray Automatic Spray Guns
accessories: *sec2* 2-77, 2-78, 2-81
air spray air caps: *sec2* 2-82
air spray fluid tips: *sec2* 2-81
conical nozzles: *sec2* 2-81
Cross−Cut nozzles: *sec2* 2-83, 2-84
description: *sec2* 2-73
dome nozzles: *sec2* 2-86, 2-88
features: *sec2* 2-73
HVLP air caps, production and compliance: *sec2* 2-78
HVLP fluid tips: *sec2* 2-77
ordering information: *sec2* 2-75
specifications: *sec2* 2-74

Prism Spray Guns, available models: *sec2* 2-71

Product Names of Glycol Ethers and Glycol Ether Esters: *sec14* 14-31

Production Air Caps
HVLP: *sec2* 2-78
KVLP: *sec1* 1-20

Pump Accessories: *sec4* 4-29

Pump Comparisons: *sec4* 4-1

Pump Packing and Solvent Chamber Fluid Guide: *sec4* 4-5; *sec14* 14-5

Pump Performance: *sec4* 4-2

Pumps
180D/360D: *sec4* 4-31
description: *sec4* 4-31
ordering information: *sec4* 4-33
specifications: *sec4* 4-32
standard packing glands: *sec4* 4-34
25B: *sec4* 4-9
16:1: *sec4* 4-9
2:1 and 4:1: *sec4* 4-9
27:1: *sec4* 4-9
description: *sec4* 4-9
features: *sec4* 4-9
ordering information: *sec4* 4-11
specifications: *sec4* 4-10
standard packing glands: *sec4* 4-12
64B: *sec4* 4-13
description: *sec4* 4-13
features: *sec4* 4-13
ordering information: *sec4* 4-15
specifications: *sec4* 4-14
standard packing glands: *sec4* 4-16
PermaFlo: *sec4* 4-17
description: *sec4* 4-17
features: *sec4* 4-17
ordering information: *sec4* 4-19
815 and 830 series pumps: *sec4* 4-19
air motor service kits: *sec4* 4-19, 4-20
hydraulic section kits: *sec4* 4-20
specifications: *sec4* 4-18

Q

Quattro Spray Gun: *sec2* 2-51

Quick Exhaust Valve: *sec8* 8-13
ordering information: *sec8* 8-13
in−line check: *sec8* 8-13

R

RA−20 Rotary Atomizer
description: *sec3* 3-1
features: *sec3* 3-1
ordering information: *sec3* 3-3, 3-4
specifications: *sec3* 3-2

RA−20R Rotary Atomizer
description: *sec3* 3-7
features: *sec3* 3-7
ordering information: *sec3* 3-9, 3-10
specifications: *sec3* 3-8

Reciprocator Speed, automatic spray systems: *sec14* 14-17

© 2013 Nordson Corporation
All rights reserved

R(contd)

Regulators
fixed orifice: *sec8* 8-7
universal automatic, non−conductive: *sec8* 8-5

Repair Kits, Kinetix: *sec1* 1-33

Resins: *sec14* 14-33

Resistivity Information
non−polar materials: *sec14* 14-35
polar materials: *sec14* 14-35

Restrictor Gasket and Retaining Seals: *sec1* 1-15, 1-16, 1-17, 1-18

Rotary Atomizers
RA−20: *sec3* 3-1
RA−20R: *sec3* 3-7

S

Single− and Dual−Filter Assemblies
description: *sec7* 7-1
filter screens: *sec7* 7-3
filters: *sec7* 7-2
ordering information: *sec7* 7-2
specifications: *sec7* 7-2

Solvent Chamber Fluid, ordering information, Type K, Q, S, T: *sec4* 4-7; *sec11* 11-3

Solvent Chamber Fluid Types (pump lubricants): *sec4* 4-6

Solvent Evaporation: *sec14* 14-23

Solvent Precautions: *sec4* 4-6

Solventborne Guns, Trilogy. *See* Trilogy Solventborne Guns

Solvents: *sec14* 14-29, 14-30

T

Technical Information
automatic spray systems reciprocator speed: *sec14* 14-17
coating material coverage: *sec14* 14-15
compressed air: *sec14* 14-19, 14-20
effect of temperature on a typical enamel: *sec14* 14-11
fluid delivery: *sec14* 14-13, 14-14
fluid pressure loss related to flow rate viscosity, and conductor size: *sec14* 14-7, 14-8
heating coating materials: *sec14* 14-1, 14-2, 14-3, 14-4
product names of glycol ethers and glycol ether esters: *sec14* 14-31
resins: *sec14* 14-33
resistivity information: *sec14* 14-35, 14-36
selection guide, packing glands, solvent chamber fluids: *sec14* 14-5
solvent evaporation: *sec14* 14-23
solvents: *sec14* 14-29, 14-30
troubleshooting film faults: *sec14* 14-25, 14-26, 14-27
variables affecting color match: *sec14* 14-21
viscosity conversion chart: *sec14* 14-9

Terms and Conditions: *Ordering* 3

Tools
gun wrenches: *sec11* 11-5
nozzle cleaning: *sec11* 11-5

Trilogy AAA Automatic Guns
description: *sec2* 2-13
exploded view: *sec2* 2-16
features: *sec2* 2-13
ordering: *sec2* 2-14
specification: *sec2* 2-13

Trilogy AAA LT Manual Guns
description: *sec2* 2-7
exploded view: *sec2* 2-10
features: *sec2* 2-7
ordering information: *sec2* 2-8
specifications: *sec2* 2-7

Trilogy AAA Manual Spray Guns
description: *sec2* 2-1
exploded view: *sec2* 2-4
features: *sec2* 2-1
Specifications: *sec2* 2-1, 2-2

Trilogy AC Manual Spray Guns
description: *sec2* 2-33
exploded view: *sec2* 2-36
features and benefits: *sec2* 2-33
ordering: *sec2* 2-34
specifications: *sec2* 2-33

Trilogy AS Automatic Spray Gun
description: *sec2* 2-39
exploded view: *sec2* 2-42
features and benefits: *sec2* 2-39
ordering: *sec2* 2-41
specifications: *sec2* 2-40

Trilogy AS Manual Spray Guns
description: *sec2* 2-19
pressure/siphon feed, exploded view: *sec2* 2-22
features and benefits: *sec2* 2-19
gravity feed, exploded view: *sec2* 2-24
ordering: *sec2* 2-20
specifications: *sec2* 2-20

© 2013 Nordson Corporation
All rights reserved

T(contd)

Trilogy GP Manual Spray Guns
description: *sec2* 2-27
exploded view: *sec2* 2-30
features and benefits: *sec2* 2-27
ordering: *sec2* 2-28
specifications: *sec2* 2-27

Trilogy LP Automatic Spray Gun
description: *sec2* 2-39
exploded view: *sec2* 2-42
features and benefits: *sec2* 2-39
ordering: *sec2* 2-41
specifications: *sec2* 2-40

Trilogy LVLP Manual Spray Guns
description: *sec2* 2-19
pressure/siphon feed, exploded view: *sec2* 2-22
features and benefits: *sec2* 2-19
gravity feed, exploded view: *sec2* 2-24
ordering: *sec2* 2-21
specifications: *sec2* 2-20

Trilogy QC Automatic Spray Gun
description: *sec2* 2-39
exploded view: *sec2* 2-44
features and benefits: *sec2* 2-39
ordering: *sec2* 2-41
specifications: *sec2* 2-40

Trilogy Solventborne Guns: *sec1* 1-5
description: *sec1* 1-5
features: *sec1* 1-5
ordering information: *sec1* 1-7
Specifications: *sec1* 1-6

Trilogy Waterborne Guns: *sec1* 1-1
description: *sec1* 1-1
features: *sec1* 1-1
ordering information: *sec1* 1-3
Specifications: *sec1* 1-2

Troubleshooting Film Faults
air spray: *sec14* 14-25
airless: *sec14* 14-26
rotary atomizer: *sec14* 14-27

U

Universal Automatic Non−Conductive Regulator
description: *sec8* 8-5
ordering information: *sec8* 8-6
specifications: *sec8* 8-5

V

Valves
air relay: *sec8* 8-17
ball: *sec8* 8-9
circulation: *sec8* 8-11
dump, paint/solvent: *sec8* 8-19
electro−pneumatic solenoid: *sec8* 8-15
fixed orifice: *sec8* 8-7
in−line check: *sec8* 8-13
ordering information, quick exhaust, in−line check: *sec8* 8-13
quick exhaust: *sec8* 8-13

Variables Affecting Color Match: *sec14* 14-21

Viscosity Conversion Chart: *sec14* 14-9

Vitalizer Oil, ordering information: *sec4* 4-7; *sec11* 11-3

W

Warranty: *Ordering* 2

Waterborne Guns, Trilogy. *See* Trilogy Waterborne Guns

Waterborne Systems
Iso−Batch: *sec10* 10-7
Iso−Flo: *sec10* 10-1, 10-3, 10-5

Wet Film Gauges: *sec11* 11-7

© 2013 Nordson Corporation
All rights reserved